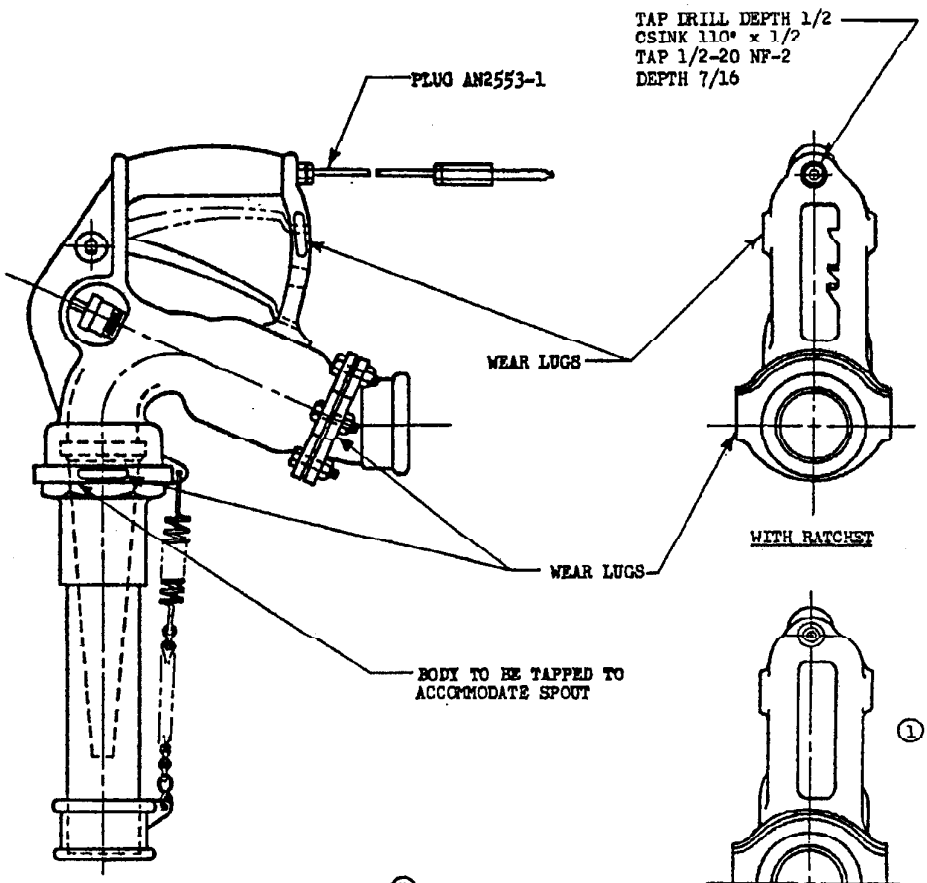

WITH RATCHET

WITHOUT RATCHET

①

①

AN PART NO.		NOMINAL SIZE INCHES
WITH RATCHET	WITHOUT RACHET	
AN2555-1	AN2555-11	1-1/4
AN2555-2	AN2555-12	1-1/2
AN2555-3	AN2555-13	2

DIMENSIONS IN INCHES. UNLESS OTHERWISE SPECIFIED, TOLERANCES ON FRACTIONS ±1/64.

THIS DRAWING AND THE SPECIFICATION COMPLEMENT ONE ANOTHER, AND, TOGETHER, COMPLETELY DEFINE THIS PRODUCT.

APPROVED 29 Nov 43 REVISED ① 16 Sep 44

PROCUREMENT SPECIFICATION	ARMY-NAVY AERONAUTICAL STANDARD	AN2555
AN-N-6	NOZZLE - AIRCRAFT FUELING	

NOTICE: No deviation from this drawing permitted except as a war emergency measure and then only after formal authorization from the Material Command or the Bureau of Aeronautics through the Procuring Service's District Representative.

NOTICE: The Government drawings, specifications, or other data are used for any purpose other than in connection with a definitely related Government procurement operation, the United States Government thereby incurs no responsibility, nor any obligation whatsoever; and the fact that the Government may have formulated, furnished, or in any way supplied the said drawings, specifications, or other data is not to be regarded by implication or otherwise as in any manner licensing the holder or any other person or corporation, or conveying any rights or permission to manufacture, use, or sell any patented invention that may in any way be related thereto.

NOTE: This drawing was approved by joint action of the War and Navy Departments as the Army-Navy standard for this product. This drawing supersedes all existing standard drawings of the same product, and all existing drawings of the same product, which are not identical with this drawing, shall be considered obsolete after the based date of approval thereof. It may be put into effect, however, at an earlier date by mutual agreement.