FED. SUP CLASS
3010

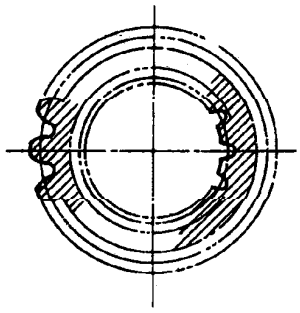

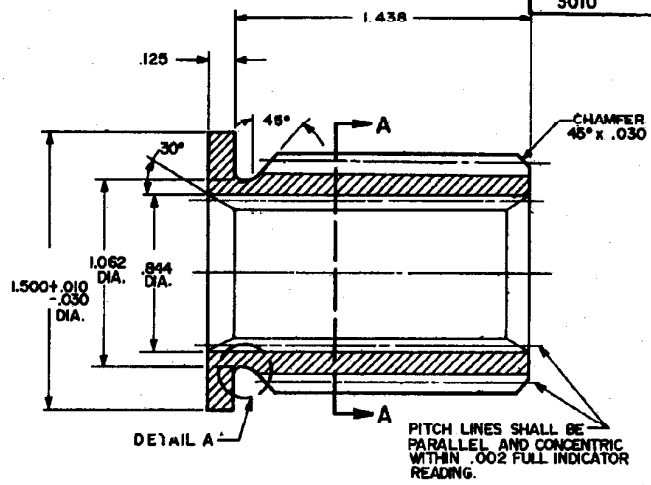

DETAIL A

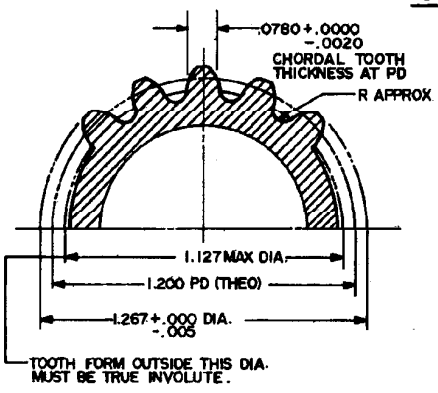

EXTERNAL SPLINE DETAIL

EXTERNAL SPLINE DATA:
24 TEETH
20/30 PITCH
30° PRESSURE ANGLE
HARDEN ROCKWELL C58 MIN.
MIN DEPTH OF EFFECTIVE CASE .010

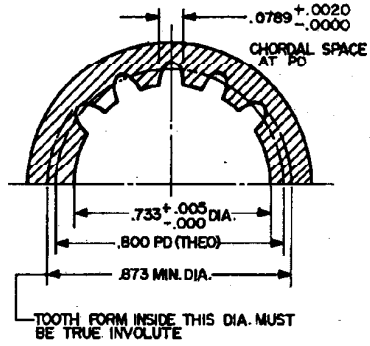

INTERNAL SPLINE DETAIL

INTERNAL SPLINE DATA:
16 TEETH
20/30 PITCH
30° PRESSURE ANGLE
HARDEN ROCKWELL C58 MIN.
MIN. DEPTH OF EFFECTIVE CASE .010

AN PART NO.
AN 4052-1

MATERIAL: CHROME-NICKEL-MOLYBDENUM STEEL, MIL-S-8690; CHROME-MOLYBDENUM-ALUMINUM, MIL-S-6709 OR EQUIVALENT STEELS HAVING THE SAME PHYSICAL PROPERTIES.

DIMENSIONS IN INCHES. UNLESS OTHERWISE SPECIFIED, TOLERANCES: THREE PLACE DECIMALS ±.010, ANGLES ±2°

APPROVED 26 DEC 41 REVISED ① 12 APR 44 ② 21 OCT 44 ③ 18 JUL 45 ④ 5 MAR 46 ⑤ 14 NOV 46 ⑥ 13 JUNE 72 ⑦ 10 JUN 87

⑦ ⑦

P. A A.F — 71 Other Cust Air Force-99 Navy— AS	INTERNATIONAL INTEREST	TITLE COUPLING, SHAFT, RIGID	MILITARY STANDARDS AN 4052
PROCUREMENT SPECIFICATION NONE	SUPERSEDES:		SHEET 1 OF 1

DD FORM 1 MAY 73 672-1 (COORDINATED) PREVIOUS EDITIONS OF THIS FORM ARE OBSOLETE 3010-0044

USER ACTIVITIES:

REVIEWER ACTIVITIES: AIR FORCE - 11

DISTRIBUTION STATEMENT A. Approved for public release; distribution is unlimited.

AMSC N/A

This military standard is approved for use by all Departments and Agencies of the Department of Defense. Selection for all new engineering and design applications and for repetitive use shall be made from this document when applicable.