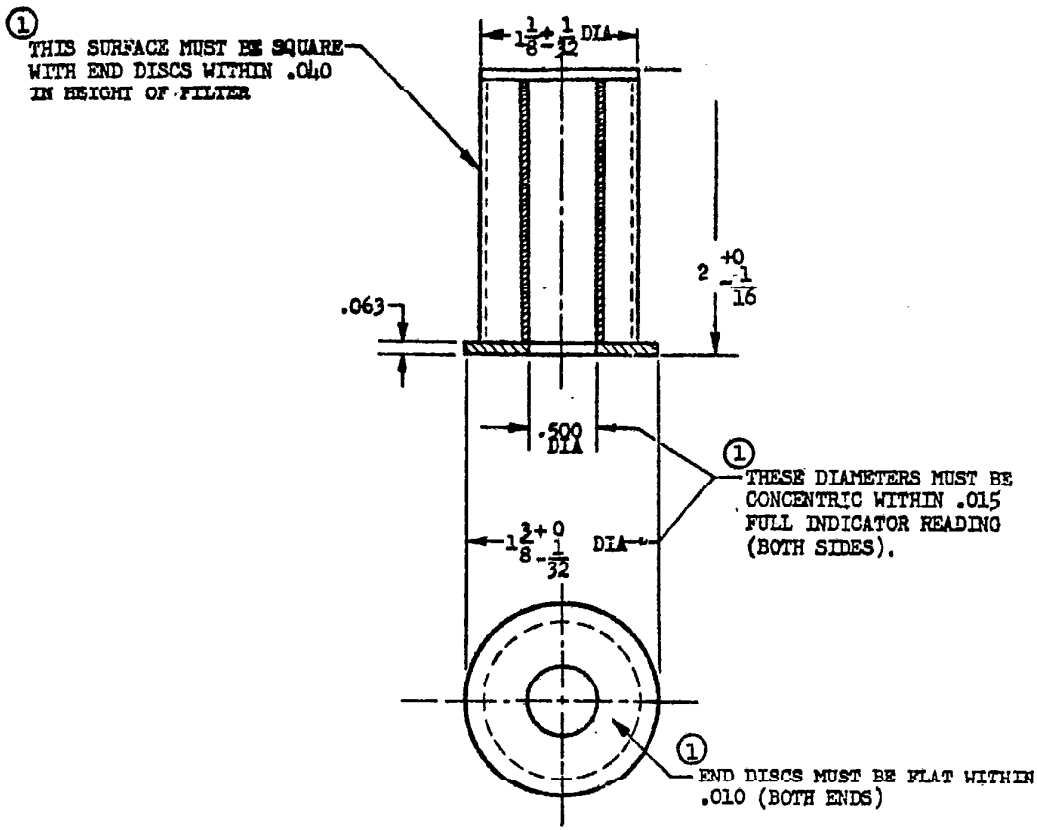

AN PART NO.
AN6237-1

DIMENSIONS IN INCHES. UNLESS OTHERWISE SPECIFIED, TOLERANCES: DECIMALS ±.010.

FOR ACCEPTABLE PRODUCTS SEE ANA BULLETIN NO. 117.

APPROVED 23 Jun 43 REVISED 1 27 Sep 48

PROCUREMENT SPECIFICATION	AIR FORCE-NAVY AERONAUTICAL STANDARD	AN6237
AN-F-3	FILTER ELEMENT - HYDRAULIC REPLACEABLE MICRONIC VENT TYPE	

NOTICE: When Government drawings, specifications, or other data are used for any purpose other than in connection with a definitely related Government procurement operation, the United States Government thereby incurs no responsibility, nor any obligation whatsoever; and the fact that the Government may have formulated, furnished, or in any way supplied the said drawings, specifications, or other data is not to be regarded by implication or otherwise as in any manner licensing the holder or any other person or corporation, or conveying any rights or permission to manufacture, use, or sell any patented invention that may in any way be related thereto.

NOTE: This drawing was approved by joint action of the USN and Navy Departments as Navy standard for this product. This drawing supersedes all antecedent standard ... for the same product and shall become effective for the procurement of aeronautical ... or for use in new design, not later than ... after the latest date of approval ... It may be put into effect, however, at an earlier date after promulgation.