INCH-POUND

MIL-C-18312/4C
27 August 2001
SUPERSEDING
MIL-C-18312/4B
8 January 1970

MILITARY SPECIFICATION SHEET

CAPACITORS, FIXED, METALLIZED (PAPER-PLASTIC, OR PLASTIC FILM) DIELECTRIC, DIRECT CURRENT (HERMETICALLY SEALED IN METAL CASES), STYLE CH53

This specification is approved for use by all Departments and Agencies of the Department of Defense.

The requirements for acquiring the product described herein shall consist of this specification sheet and MIL-C-18312.

INACTIVE FOR NEW DESIGN,
after 8 January 1970

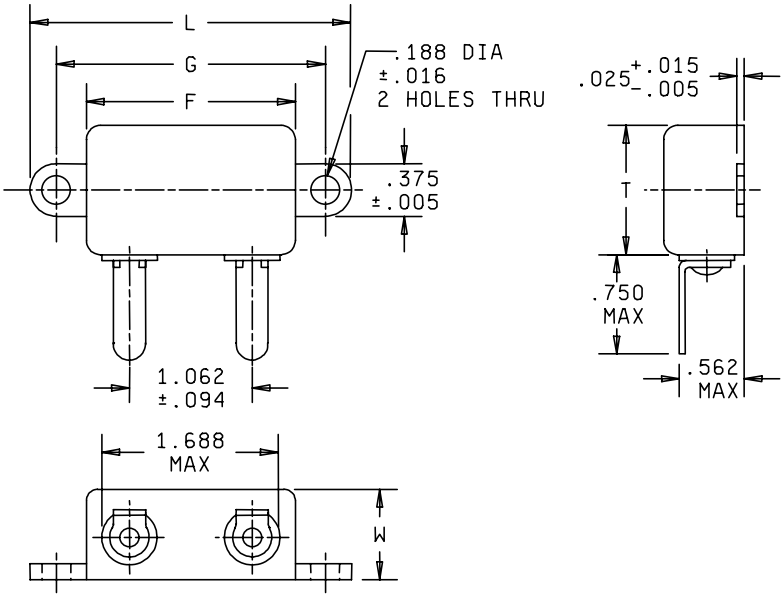

Inches	mm
.005	.13
.015	.38
.016	.41
.025	.64
.032	.81
.094	2.39
.188	4.78
.375	9.53
.562	14.27
.750	19.05
1.062	26.97
1.688	42.88

NOTES:
1. Dimensions are in inches.
2. Metric equivalents are given for general information only.
3. See table I for additional dimensions.

DISTRIBUTION STATEMENT A. Approved for public release; distribution is unlimited.

REQUIREMENTS:

Qualification inspection is not required.

Dimensions: See figure and table I.

TABLE I. Characteristics.

Part or Identifying Number (PIN) 1/	DC rated voltage (volts)	Capacitance value (µF)	Dimensions, nominal (inches) 2/					Superseded MIL-C-18312/4A dash numbers Capacitance tolerance	
			F ±.062 (1.57)	T ±.062 (1.57)	W +.062 (+1.57) -.125 (-3.18)	G ±.031 (0.79)	L ±.062 (1.57)	±10%	±20%
CH53B1NV475-	150	4.7	1.812	1.000	0.750	2.125	2.500	0101	0102
CH53B1NV685-	150	6.8	2.000	1.750	0.750	2.375	2.750	0103	0104
CH53B1NV106-	150	10.0	2.000	1.750	0.750	2.375	2.750	0105	0106
CH53B1NV156-	150	15.0	2.000	2.000	1.125	2.375	2.750	0107	0108
CH53B1NC474-	200	0.47	1.812	1.000	0.750	2.125	2.500	0109	0110
CH53B1NC105-	200	1.0	1.812	1.000	0.750	2.125	2.500	0111	0112
CH53B1NC225-	200	2.2	1.812	1.000	0.750	2.125	2.500	0113	0114
CH53B1NE224-	400	0.22	1.812	1.000	0.750	2.125	2.500	0115	0116
CH53B1NE474-	400	0.47	1.812	1.000	0.750	2.125	2.500	0117	0118
CH53B1NE105-	400	1.0	1.812	1.000	0.875	2.125	2.500	0119	0120
CH53B1NE225-	400	2.2	2.000	1.750	0.750	2.375	2.750	0121	0122
CH53B1NE475-	400	4.7	2.000	2.000	1.000	2.375	2.750	0123	0124
CH53B1NF104-	600	0.1	1.812	1.000	0.750	2.125	2.500	0125	0126
CH53B1NF224-	600	0.22	1.812	1.000	0.750	2.125	2.500	0127	0128
CH53B1NF474-	600	0.47	1.812	1.000	0.750	2.125	2.500	0129	0130
CH53B1NF105-	600	1.0	1.812	1.250	0.875	2.125	2.500	0131	0132
CH53B1NF225-	600	2.2	2.000	2.000	0.875	2.375	2.750	0133	0134
CH53B1NF475-	600	4.7	2.000	2.000	1.500	2.375	2.750	0135	0136

1/ Complete PIN will include an additional symbol for capacitance tolerance.
2/ See table II for metric equivalents.

TABLE II. Millimeter equivalents of decimal inches.

Inches	mm	Inches	mm	Inches	mm
.031	0.79	1.125	28.58	2.125	53.98
.062	1.57	1.250	31.75	2.375	60.33
.125	3.18	1.500	38.10	2.500	63.50
.750	19.05	1.750	44.45	2.750	69.85
.875	22.23	1.812	46.02		
1.000	25.40	2.000	50.80		

Case material: Magnetic or nonmagnetic.

Capacitance value: See table I.

Capacitance tolerance: See table I.

DC rated voltage: See table I.

Circuit diagram: 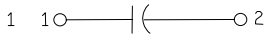

Seal: Method 112 of MIL-STD-202, condition A.
Liquid-filled capacitors: One hour at 125° ±3°C with no evidence of leakage.

Dielectric withstanding voltage: Method 301 of MIL-STD-202.
Terminal to terminal: 200 percent of rated dc voltage or 2,000 volts whichever is lower.

Capacitance: Method 305 of MIL-STD-202 (for value and tolerance see table I).

Dissipation factor:
At ±25°C: 1.0 percent.
At ±125°C: 2.0 percent.

Insulation resistance:
Terminal to terminal: See table III.
Terminal to case (case not a terminal): 10,000 megohms.

Barometric pressure: Method 105 of MIL-STD-202, test condition B(3.44 inches of mercury (50,000 ft)).

Vibration, low frequency: Method 201 of MIL-STD-202.

Thermal shock: Method 107 of MIL-STD-202, condition A, except the high temperature shall be +125°C.

Immersion: Method 104 of MIL-STD-202, condition C.
Insulation resistance:
Terminal to terminal: Not less than 1/3 the value specified in table III.
Terminal to case (case not a terminal): 5,000 megohms, minimum.

Dielectric withstanding voltage:
Terminal to terminal: 150 percent rated dc voltage.
Terminal to case (case not a terminal): 400 percent of rated dc voltage or 2,000 volts whichever is lower.

Capacitance change: Not to exceed 10 percent of initial value.

Dissipation factor: Not to exceed 110 percent of initial requirement.

Terminal strength: Method 211 of MIL-STD-202, conditions A and E.
Condition A: Applied force 2 pounds.
Condition E: Torque 2 pound-inches.

Low temperature and capacitance change with temperature.
Conditions: 48 hours with rated voltage applied.
Capacitance change: See table III.

Life:
Conformance: 250 hours at conditions specified for 1,000-hour test.

Dissipation factor:
At high ambient test temperature (any time 24 to 48 hours from start of test) - Not greater than 2.0 percent.
At high ambient test temperature (any time during last 48 hours of test). Not greater than 2.5 percent.
At 25°C (after life test): Not greater than 1.25 percent.

Capacitance:
At 25°C (after life test): Within 10 percent of initial value.

Insulation resistance: At 25°C (after life test).
Terminal to terminal: Not less than 1/3 of value specified in table III.
Terminal to case (case not a terminal): Not less than 5,000 megohms.

Supersession information: See table I.

TABLE III. Characteristic.

Operating temperature range	-55 to +125°C	
DC voltage rating (volts)	200	400, 600
High ambient test temperature	125°C	125°C
Low ambient test temperature	-55°C	-55° C
Megohms x microfarads:		
At 25°C	2,000 min	2,000 min
At high ambient test temperature	10 min	40 min
Insulation resistance (megohms):		
At 25°C 1/	12,000	12,000
At high ambient test temperature 1/	150	600
Capacitance change at low temperature	-15% max	-15% max
Life test voltage (% rated voltage)	140 %	140 %

1/ Need not exceed.

Custodians:
Army - CR
Navy - EC
Air Force - 11
DLA - CC

Review activities:
Army - AR
Navy - AS, MC, OS
Air Force - 19

Preparing activity:
DLA - CC

(Project 5910-2126-03)