MILITARY SPECIFICATION SHEET

CONNECTORS, ELECTRICAL, PRINTED WIRING BOARD
RECEPTACLE, CARD INSERTION, CONTACT SPACING (0.050), TYPE AD

This specification is approved for use by all Departments and Agencies of the Department of Defense.

The complete requirements for procuring the connectors described herein shall consist of this document and the latest issue of Specification MIL-C-21097.

TYPE AD CONNECTORS SHALL NOT BE USED IN AIRBORNE EQUIPMENT

NOT FOR USE IN NEW DESIGNS OF ARMY EQUIPMENT

INCHES	MM
.001	.03
.002	.05
.005	.13
.009	.23
.020	.51
.025	.64
.050	1.27
.054	1.37
.071	1.80
.093	2.36
.100	2.54
.150	3.80
.250	6.35
.282	7.16
.488	12.40

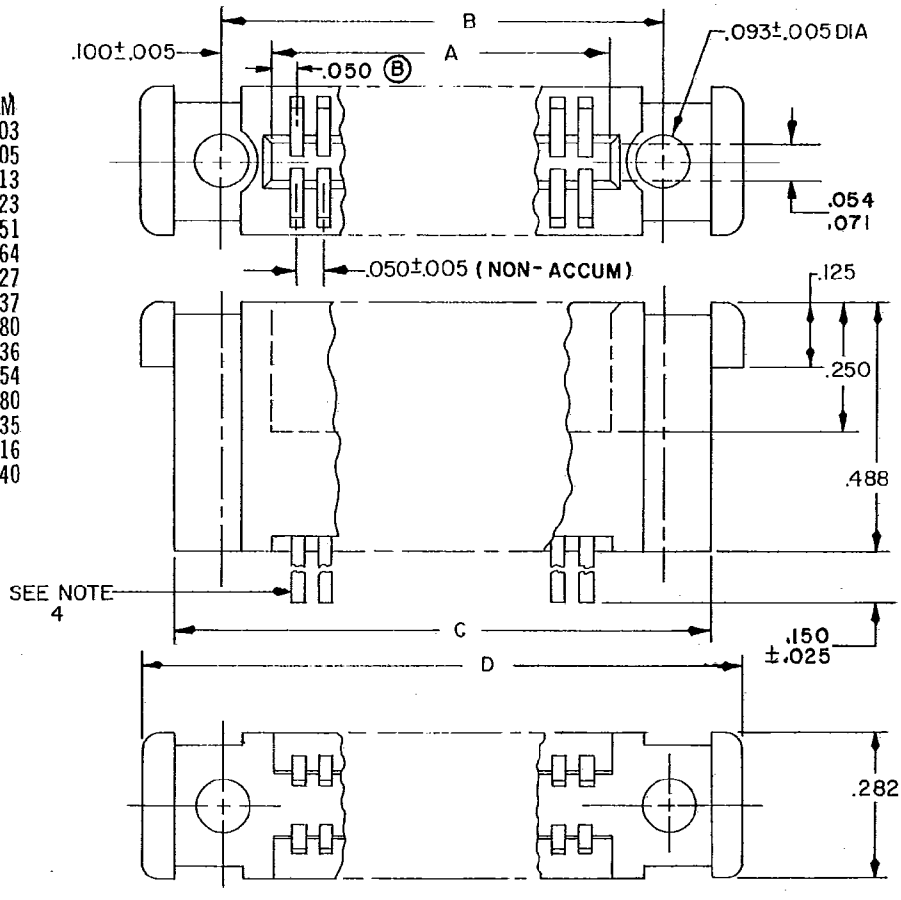

FIGURE 1. Type AD connector.

(B) denotes changes

FSC 5935

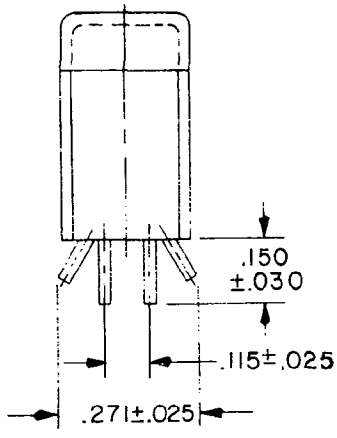

TYPE AD1 DUAL CONTACT
STRAIGHT SOLDER TAB
(NO EYELET)

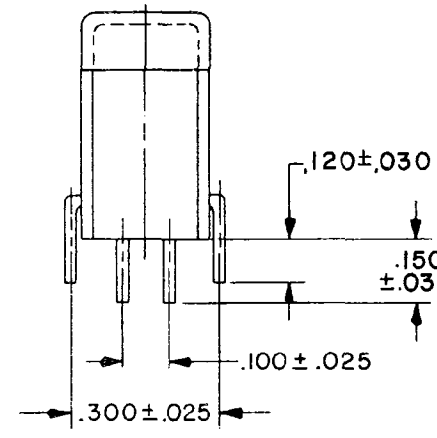

TYPE AD2 DUAL CONTACT
STRAIGHT PLUG-IN

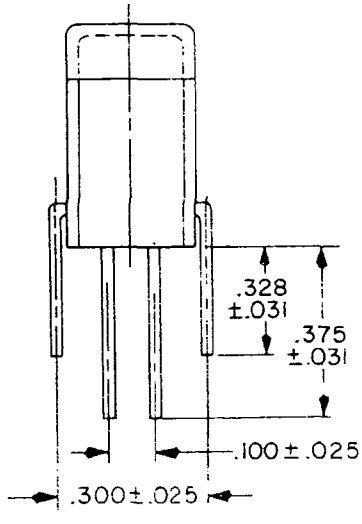

TYPE AD3 DUAL CONTACT
WRAPOST

INCHES	MM
.025	.64
.030	.76
.031	.74
.068	1.73
.094	2.39
.100	2.54
.115	2.92
.120	3.05
.125	3.18
.150	3.81
.300	7.62
.328	8.33
.375	9.53

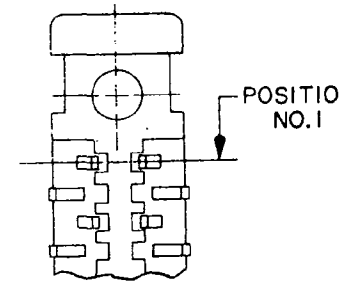

BOTTOM VIEW TYPE AD1

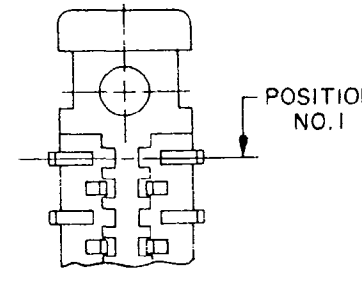

BOTTOM VIEW TYPES AD2
AND AD3

NOTES:
1. Dimensions are in inches.
2. Unless otherwise specified, tolerance is ±.010 (.25 mm) for three place decimals.
3. Metric equivalents (to the nearest .01 mm) are given for general information only and are based upon 1 inch = 25.4 mm.
4. Contact terminations shall be .010 ±.001 (.25 ±.03 mm) thickness and .020 ±.002 (.51 ±.05 mm) width.
5. Slot shall accept the following thickness printed wiring board size 2 - .054 (1.37 mm) to .071 (1.80 mm).

(B) FIGURE 1. Type AD connector - Continued.

REQUIREMENTS:

Dimensions and configuration: See figure 1 and table I.

Contact current rating: 1.0 ampere.

Spring contact material: Beryllium copper conforming to QQ-C-533 or QQ-C-530 and shall be gold plated, type II, class 1 of MIL-G-45204.

Individual contact separation: 1/2 oz.

Individual contact separation after durability: 1/2 oz.

Wiring: Connectors shall be wired using #30 AWG wire.

Part number: Consists of the letter "M", the basic document number of this specification sheet, and a dash number taken from table I.

TABLE I. Connectors, electrical, printed wiring board receptacle, card insertion, contact spacing (0.050), type AD, class b.

Dash number	Style	Type	Dimensions (inches) 1/			
			A ±.005 (±.13)	B ±.010 (±.25)	C ±.010 (±.25)	D ±.010 (±.25)
01 02 03	06	AD1 AD2 AD3	.350 (8.89)	.550 (13.97)	.725 (18.42)	.850 (21.59)
04 05 06	07	AD1 AD2 AD3	.400 (10.16)	.600 (15.24)	.775 (19.69)	.900 (22.86)
07 08 09	08	AD1 AD2 AD3	.450 (11.43)	.650 (16.51)	.825 (20.96)	.950 (24.13)
10 11 12	09	AD1 AD2 AD3	.500 (12.70)	.700 (17.78)	.875 (22.23)	1.000 (25.4)
13 14 15	10	AD1 AD2 AD3	.550 (13.97)	.750 (19.05)	.925 (23.50)	1.050 (26.67)
16 17 18	11	AD1 AD2 AD3	.600 (15.24)	.800 (20.32)	.975 (24.77)	1.100 (27.94)
19 20 21	12	AD1 AD2 AD3	.650 (16.51)	.850 (21.59)	1.025 (26.04)	1.150 (29.21)
22 23 24	13	AD1 AD2 AD3	.700 (17.78)	.900 (22.86)	1.075 (27.31)	1.200 (30.48)
25 26 27	14	AD1 AD2 AD3	.750 (19.05)	.950 (24.13)	1.125 (28.58)	1.250 (31.75)
28 29 30	15	AD1 AD2 AD3	.800 (20.32)	1.000 (25.4)	1.175 (29.85)	1.300 (33.02)

See footnote at end of table.

TABLE I. Connectors, electrical, printed wiring board receptacle, card insertion, contact spacing (0.050), type AD, class b. - Continued

Dash number	Style	Type	Dimensions (inches) 1/			
			A ±.005 (±.13)	B ±.010 (±.25)	C ±.010 (±.25)	D ±.010 (±.25)
31 32 33	16	AD1 AD2 AD3	.850 (21.59)	1.050 (26.67)	1.225 (31.12)	1.350 (34.30)
34 35 36	17	AD1 AD2 AD3	.900 (22.86)	1.100 (27.94)	1.275 (32.39)	1.400 (35.56)
37 38 39	18	AD1 AD2 AD3	.950 (24.13)	1.150 (29.21)	1.325 (33.66)	1.450 (36.83)
40 41 42	19	AD1 AD2 AD3	1.000 (25.4)	1.200 (30.48)	1.375 (34.93)	1.500 (38.10)
43 44 45	20	AD1 AD2 AD3	1.050 (26.67)	1.250 (31.75)	1.425 (36.20)	1.550 (39.37)
46 47 48	21	AD1 AD2 AD3	1.100 (27.94)	1.300 (33.02)	1.475 (37.47)	1.600 (40.64)
49 50 51	22	AD1 AD2 AD3	1.150 (29.21)	1.350 (34.30)	1.525 (38.74)	1.650 (41.91)
52 53 54	23	AD1 AD2 AD3	1.200 (30.48)	1.400 (35.56)	1.575 (40.01)	1.700 (43.18)
55 56 57	24	AD1 AD2 AD3	1.250 (31.75)	1.450 (36.83)	1.625 (41.38)	1.750 (44.45)
58 59 60	25	AD1 AD2 AD3	1.300 (33.02)	1.500 (38.10)	1.675 (42.55)	1.800 (45.72)

1/ Millimeters are in parentheses.

Custodians:
Army - EL
Navy - EC
Air Force - 17

Review activities:
Army - MI
Navy - AS, OS
DSA - ES

User activities:
Army - MU, ME, AV, AT, WC
Navy - SH, MC

Preparing activity:
Navy - EC

Agent:
DSA - ES

(Project 5935-1924-2)