MILITARY SPECIFICATION SHEET

CONNECTORS, ELECTRICAL, PRINTED WIRING BOARD RECEPTACLE, CARD INSERTION, CONTACT SPACING (.156), TYPES A AND AD

Ⓐ

NOT FOR NEW DESIGN
IN DEPARTMENT OF THE
ARMY EQUIPMENT.

TYPES A AND AD CONNECTORS SHALL
NOT BE USED IN AIRBORNE EQUIPMENT.

This specification is approved for use by all Departments and Agencies of the Department of Defense.

The complete requirements for procuring the connectors described herein shall consist of this document and the latest issue of Specification MIL-C-21097.

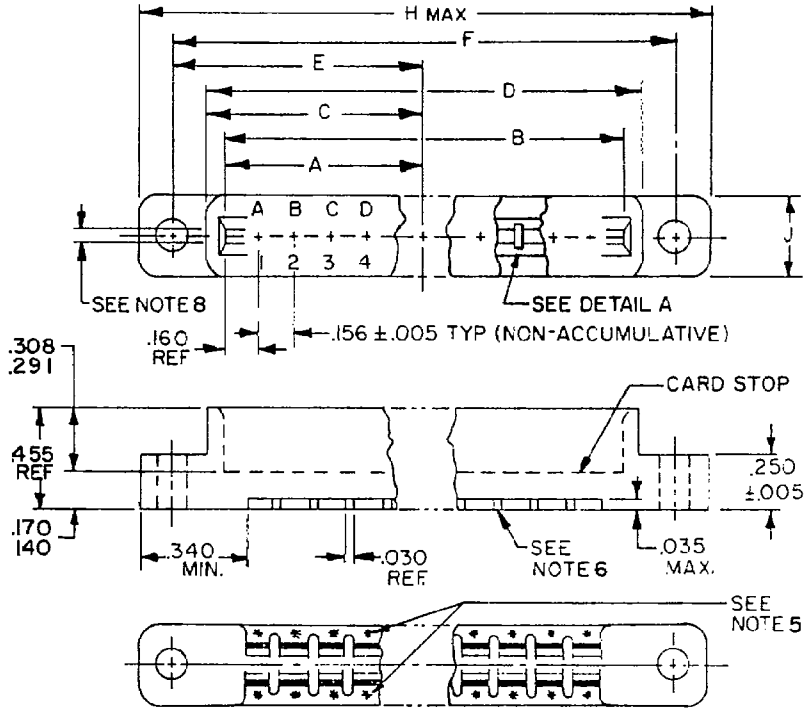

FIGURE 1. Type A and AD connectors.

Ⓐ denotes changes

FSC 5935

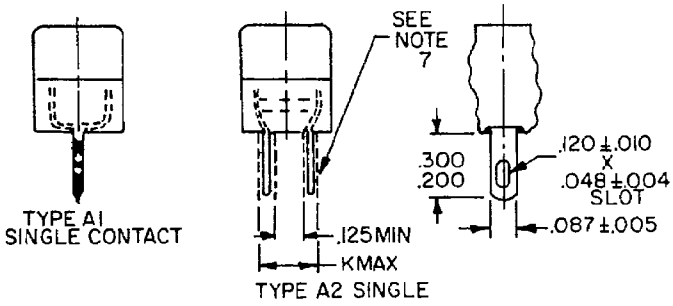

Class 'a' single contact, straight eyelet

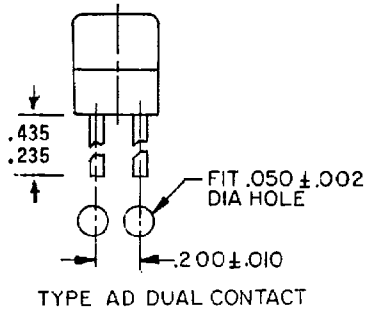

Class 'b' dual contact, straight plug-in

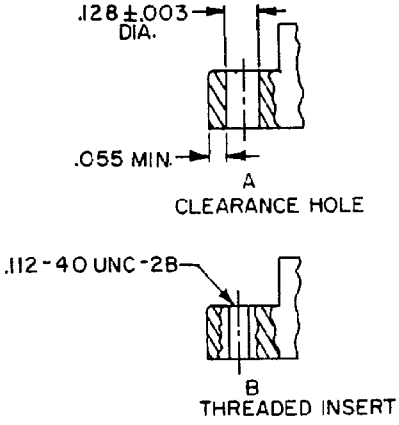

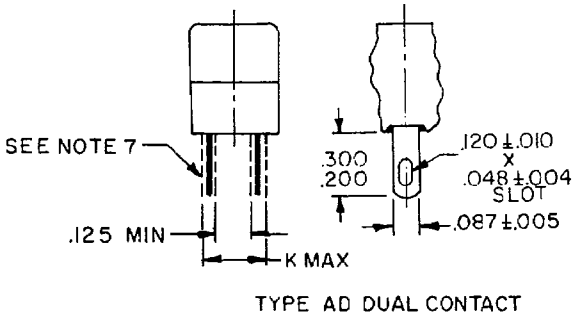

Class 'a' dual contact, straight eyelet

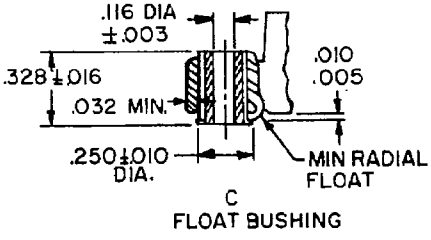

Mounting provisions

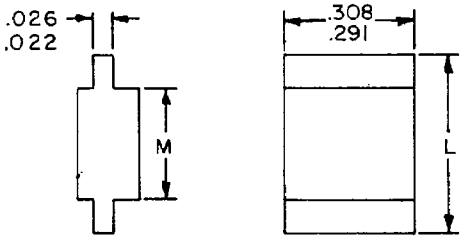

DETAIL A, KEY SLOT

FIGURE 1. Type A and AD connectors - Continued.

Size	Dim L ± .003 (.08)	Dim M .003 (.08)
2	.111 (2.82)	see note 8
3	.142 (3.61)	see note 8
4	.173 (4.39)	see note 8

INCHES	MM	INCHES	MM	INCHES	MM
.002	.05	.048	1.22	.170	4.32
.003	.08	.050	1.27	.173	4.39
.004	.10	.055	1.40	.200	5.08
.005	.13	.087	2.21	.235	5.97
.010	.25	.111	2.82	.250	6.35
.016	.41	.115	2.92	.291	7.39
.022	.56	.116	2.95	.300	7.62
.024	.61	.120	3.05	.308	7.82
.026	.66	.125	3.18	.328	8.33
.030	.76	.128	3.25	.333	8.46
.035	.89	.142	3.61	.340	8.64
.043	1.09	.156	3.96	.435	11.05
		.160	4.06	.455	11.56

NOTES:

1. Dimensions are in inches.
2. Metric equivalents (to the nearest .01 mm) are given for general information only and are based upon 1 inch = 25.4 mm.
3. Metric equivalents are in parentheses.
4. Unless otherwise specified, tolerance is ± .015 (.38 mm) for three place decimals.
5. Contacts and terminals shall be designated on the connector using raised letters and numerials in the location shown on the connector drawing. The letters G, I, O and Q shall not be used. On the connector top either letters only, numbers only, or both may be used at manufacturers option. The bottom number and letter designation shall correspond with the top designation in designating the same contact.
6. The shape of the barriers is optional except that barriers shall not protrude beyond the plane of the underside of the mounting flange. Center barrier shall be optional.
7. The portion of the terminal from the bottom of the terminal hole to the end of the terminal shall lie within the indicated tolerance zone.
8. Slot shall accept the following thickness printed wiring board:
   Size 2 - .054 (1.37 mm) to .071 (1.80 mm)
   Size 3 - .086 (2.18 mm) to .103 (2.62 mm)
   Size 4 - .117 (2.97 mm) to .134 (3.40 mm)
   Slot shall prevent entry of a printed wiring board having the following thicknesses: Size 2 - .084 (2.13 mm), Size 3 - .113 (2.87 mm), Size 4 - .144 (3.67 mm).
9. Gate allowance shall not exceed .005 (.13 mm) above or below the molded surface.

FIGURE 1. Type A and AD connectors - Continued.

TABLE I. Connector, electrical, receptacle, card insertion.

Dash number	Type	Style	Class	Size	Mounting provisions	Dimensions (inches) 1/ A ±.003 (±.08)	B ±.006 (±.15)	C ±.016 (±.41)	D ±.032 (±.81)	E ±.004 (±.10)	F ±.008 (±.20)	H (max)	J ±.010 (±.25)	K (max)
001	A1			2	A							1.864 (47.35)	.343 (8.71)	.250 (6.35)
002	A1			3	A							1.864 (47.35)	.406 (10.31)	.280 (7.11)
003	A1			4	A							1.864 (47.35)	.500 (12.70)	.310 (7.87)
004	A1			2	B							2.000 (50.8)	.343 (8.71)	.250 (6.35)
005	A1			3	B							2.000 (50.8)	.406 (10.31)	.280 (7.11)
006	A1			4	B							2.000 (50.8)	.500 (12.70)	.310 (7.87)
007	A1			2	C							2.000 (50.8)	.343 (8.71)	.250 (6.35)
008	A1			3	C							2.000 (50.8)	.406 (10.31)	.280 (7.11)
009	A1	6	a	4	C	.550 (13.97)	1.100 (27.94)	.625 (15.88)	1.250 (31.75)	.766 (19.46)	1.532 (38.91)	2.000 (50.8)	.500 (12.70)	.310 (7.87)
010	A2			2	A							1.864 (47.35)	.343 (8.71)	.250 (6.35)
011	A2			3	A							1.864 (47.35)	.406 (10.31)	.280 (7.11)
012	A2			4	A							1.864 (47.35)	.500 (12.70)	.310 (7.87)
013	A2			2	B							2.000 (50.8)	.343 (8.71)	.250 (6.35)
014	A2			3	B							2.000 (50.8)	.406 (10.31)	.280 (7.11)
015	A2			4	B							2.000 (50.8)	.500 (12.70)	.310 (7.87)
016	A2			2	C							2.000 (50.8)	.343 (8.71)	.250 (6.35)
017	A2			3	C							2.000 (50.8)	.406 (10.31)	.280 (7.11)
018	A2			4	C							2.000 (50.8)	.500 (12.70)	.310 (7.87)

1/ Millimeters are in parentheses.

TABLE I. Connector, electrical, receptacle, card insertion. -Continued

Dash number	Type	Style	Class	Size	Mounting provisions	Dimensions (inches) 1/ A ±.003 (±.08)	B ±.006 (±.15)	C ±.016 (±.41)	D ±.032 (±.81)	E ±.004 (±.10)	F ±.008 (±.20)	H (max)	J ±.010 (±.25)	K (max)
019			a	2	A							1.864 (47.35)	.343 (8.71)	.250 (6.35)
020			a	3	A							1.864 (47.35)	.406 (10.31)	.280 (7.11)
021			a	4	A							1.864 (47.35)	.500 (12.70)	.310 (7.87)
022			a	2	B							2.000 (50.8)	.343 (8.71)	.250 (6.35)
023			a	3	B							2.000 (50.8)	.460 (10.31)	.280 (7.11)
024			a	4	B							2.000 (50.8)	.500 (12.70)	.310 (7.87)
025			a	2	C							2.000 (50.8)	.343 (8.71)	.250 (6.35)
026			a	3	C							2.000 (50.8)	.406 (10.31)	.280 (7.11)
027			a	4	C							2.000 (50.8)	.500 (12.70)	.310 (7.87)
028	AD	6	b	2	A	.550 (13.97)	1.100 (27.94)	.625 (15.88)	1.250 (31.75)	.766 (19.46)	1.532 (38.91)	1.864 (47.35)	.343 (8.71)	.250 (6.35)
029			b	3	A							1.864 (47.35)	.406 (10.31)	.280 (7.11)
030			b	4	A							1.864 (47.35)	.500 (12.70)	.310 (7.87)
031			b	2	B							2.000 (50.8)	.343 (8.71)	.250 (6.35)
032			b	3	B							2.000 (50.8)	.460 (10.31)	.280 (7.11)
033			b	4	B							2.000 (50.8)	.500 (12.70)	.310 (7.87)
034			b	2	C							2.000 (50.8)	.343 (8.71)	.250 (6.35)
035			b	3	C							2.000 (50.8)	.460 (10.31)	.280 (7.11)
036			b	4	C							2.000 (50.8	.500 (12.70)	.310 (7.87)

1/ Millimeters are in parentheses.

TABLE I. Connector, electrical, receptacle, card insertion. -Continued

Dash number	Type	Style	Class	Size	Mounting provisions	Dimensions (inches) 1/ A ±.003 (±.08)	B ±.006 (±.15)	C ±.016 (±.41)	D ±.032 (±.81)	E ±.004 (±.10)	F ±.008 (±.20)	H (max)	J ±.010 (±.25)	K (max)
037	A1			2	A							2.488 (63.20)	.343 (8.71)	.250 (6.35)
038	A1			3	A							2.488 (63.20)	.406 (10.31)	.280 (7.11)
039	A1			4	A							2.488 (63.20)	.500 (12.70)	.310 (7.87)
040	A1			2	B							2.625 (66.68)	.343 (8.71)	.250 (6.35)
041	A1			3	B							2.625 (66.68)	.406 (10.31)	.280 (7.11)
042	A1			4	B							2.625 (66.68)	.500 (12.70)	.310 (7.87)
043	A1			2	C							2.625 (66.68)	.343 (8.71)	.250 (6.35)
044	A1			3	C							2.625 (66.68)	.406 (10.31)	.280 (7.11)
045	A1	10	a	4	C	.862 (21.89)	1.724 (43.79)	.937 (23.80)	1.875 (47.63)	1.078 (27.38)	2.156 (54.76)	2.625 (66.68)	.500 (12.70)	.310 (7.87)
046	A2			2	A							2.488 (63.20)	.343 (8.71)	.250 (6.35)
047	A2			3	A							2.488 (63.20)	.406 (10.31)	.280 (7.11)
048	A2			4	A							2.488 (63.20)	.500 (12.70)	.310 (7.87)
049	A2			2	B							2.625 (66.68)	.343 (8.71)	.250 (6.35)
050	A2			3	B							2.625 (66.68)	.406 (10.31)	.280 (7.11)
051	A2			4	B							2.625 (66.68)	.500 (12.70)	.310 (7.87)
052	A2			2	C							2.625 (66.68)	.343 (8.71)	.250 (6.35)
053	A2			3	C							2.625 (66.68)	.406 (10.31)	.280 (7.11)
054	A2			4	C							2.625 (66.68)	.500 (12.70)	.310 (7.87)

1/ Millimeters are in parentheses.

TABLE I. Connector, electrical, receptacle, card insertion. -Continued

Dash number	Type	Style	Class	Size	Mounting provisions	Dimensions (inches) 1/ A ±.003 (±.08)	B ±.006 (±.15)	C ±.016 (±.41)	D ±.032 (±.81)	E ±.004 (±.10)	F ±.008 (±.20)	H (max)	J ±.010 (±.25)	K (max)
055			a	2	A							2.488 (63.20)	.343 (8.71)	.250 (6.35)
056			a	3	A							2.488 (63.20)	.406 (10.31)	.280 (7.11)
057			a	4	A							2.488 (63.20)	.500 (12.70)	.310 (7.87)
058			a	2	B							2.625 (66.68)	.343 (8.71)	.250 (6.35)
059			a	3	B							2.625 (66.68)	.406 (10.31)	.280 (7.11)
060			a	4	B							2.625 (66.68)	.500 (12.70)	.310 (7.87)
061			a	2	C							2.625 (66.68)	.343 (8.71)	.250 (6.35)
062			a	3	C							2.625 (66.68)	.406 (10.31)	.280 (7.11)
063	AD	10	a	4	C	.862 (21.89)	1.724 (43.79)	.937 (23.80)	1.875 (47.63)	1.078 (27.38)	2.156 (54.76)	2.625 (66.68)	.500 (12.70)	.310 (7.87)
064			b	2	A							2.488 (63.20)	.343 (8.71)	.250 (6.35)
065			b	3	A							2.488 (63.20)	.406 (10.31)	.280 (7.11)
066			b	4	A							2.488 (63.20)	.500 (12.70)	.310 (7.87)
067			b	2	B							2.625 (66.68)	.343 (8.71)	.250 (6.35)
068			b	3	B							2.625 (66.68)	.406 (10.31)	.280 (7.11)
069			b	4	B							2.625 (66.68)	.500 (12.70)	.310 (7.87)
070			b	2	C							2.625 (66.68)	.343 (8.71)	.250 (6.35)
071			b	3	C							2.625 (66.68)	.406 (10.31)	.280 (7.11)
072			b	4	C							2.625 (66.68)	.500 (12.70)	.310 (7.87)

1/ Millimeters are in parentheses.

TABLE I. Connector, electrical, receptacle, card insertion. -Continued

Dash number	Type	Style	Class	Size	Mounting provisions	Dimensions (inches) 1/ A ±.003 (±.08)	B ±.006 (±.15)	C ±.016 (±.41)	D ±.032 (±.81)	E ±.004 (±.10)	F ±.008 (±.20)	H (max)	J ±.010 (±.25)	K (max)
073	A1			2	A							3.268 (83.01)	.343 (8.71)	.250 (6.35)
074	A1			3	A							3.268 (83.01)	.406 (10.31)	.280 (7.11)
075	A1			4	A							3.268 (83.01)	.500 (12.70)	.310 (7.87)
076	A1			2	B							3.406 (86.51)	.343 (8.71)	.250 (6.35)
077	A1			3	B							3.406 (86.51)	.406 (10.31)	.280 (7.11)
078	A1			4	B							3.406 (86.51)	.500 (12.70)	.310 (7.87)
079	A1			2	C							3.406 (86.51)	.343 (8.71)	.250 (6.35)
080	A1			3	C							3.406 (86.51)	.406 (10.31)	.280 (7.11)
081	A1	15	a	4	C	1.252 (31.80)	2.504 (63.60)	1.328 (33.73)	2.656 (67.46)	1.469 (37.31)	2.938 (74.52)	3.406 (86.51)	.500 (12.70)	.310 (7.87)
082	A2			2	A							3.268 (83.01)	.343 (8.71)	.250 (6.35)
083	A2			3	A							3.268 (83.01)	.406 (10.31)	.280 (7.11)
084	A2			4	A							3.268 (83.01)	.500 (12.70)	.310 (7.87)
085	A2			2	B							3.406 (86.51)	.343 (8.71)	.250 (6.35)
086	A2			3	B							3.406 (86.51)	.406 (10.31)	.280 (7.11)
087	A2			4	B							3.406 (86.51)	.500 (12.70)	.310 (7.87)
088	A2			2	C							3.406 (86.51)	.343 (8.71)	.250 (6.35)
089	A2			3	C							3.406 (86.51)	.406 (10.31)	.280 (7.11)
090	A2			4	C							3.406 (86.51)	.500 (12.70)	.310 (7.87)

1/ Millimeters are in parentheses.

TABLE I. Connector, electrical, receptacle, card insertion. -Continued

Dash number	Type	Style	Class	Size	Mounting provisions	Dimensions (inches) 1/ A ±.003 (±.08)	B ±.006 (±.15)	C ±.016 (±.41)	D ±.032 (±.81)	E ±.004 (±.10)	F ±.008 (±.20)	H (max)	J ±.010 (±.25)	K (max)
091			a	2	A							3.268 (83.01)	.343 (8.71)	.250 (6.35)
092			a	3	A							3.268 (83.01)	.406 (10.31)	.280 (7.11)
093			a	4	A							3.268 (83.01)	.500 (12.70)	.310 (7.87)
094			a	2	B							3.406 (86.51)	.343 (8.71)	.250 (6.35)
095			a	3	B							3.406 (86.51)	.406 (10.31)	.280 (7.11)
096			a	4	B							3.406 (86.51)	.500 (12.70)	.310 (7.87)
097			a	2	C							3.406 (86.51)	.343 (8.71)	.250 (6.35)
098			a	3	C							3.406 (86.51)	.406 (10.31)	.280 (7.11)
099	AD	15	a	4	C	1.252 (31.80)	2.504 (63.60)	1.328 (33.73)	2.656 (67.46)	1.469 (37.31)	2.938 (74.52)	3.406 (86.51)	.500 (12.70)	.310 (7.87)
100			b	2	A							3.268 (83.01)	.343 (8.71)	.250 (6.35)
101			b	3	A							3.268 (83.01)	.406 (10.31)	.280 (7.11)
102			b	4	A							3.268 (83.01)	.500 (12.70)	.310 (7.87)
103			b	2	B							3.406 (86.51)	.343 (8.71)	.250 (6.35)
104			b	3	B							3.406 (86.51)	.406 (10.31)	.280 (7.11)
105			b	4	B							3.406 (86.51)	.500 (12.70)	.310 (7.87)
106			b	2	C							3.406 (86.51)	.343 (8.71)	.250 (6.35)
107			b	3	C							3.406 (86.51)	.406 (10.31)	.280 (7.11)
108			b	4	C							3.406 (86.51)	.500 (12.70)	.310 (7.87)

1/ Millimeters are in parentheses.

TABLE I. Connector, electrical, receptacle, card insertion. -Continued

Dash number	Type	Style	Class	Size	Mounting provisions	Dimensions (inches) 1/ A ±.003 (±.08)	B ±.006 (±.15)	C ±.016 (±.41)	D ±.032 (±.81)	E ±.004 (±.10)	F ±.008 (±.20)	H (max)	J ±.010 (±.25)	K (max)
109	A1			2	A							3.736 (94.89)	.343 (8.71)	.250 (6.35)
110	A1			3	A							3.736 (94.89)	.406 (10.31)	.280 (7.11)
111	A1			4	A							3.736 (94.89)	.500 (12.70)	.310 (7.87)
112	A1			2	B							3.875 (98.43)	.343 (8.71)	.250 (6.35)
113	A1			3	B							3.875 (98.43)	.406 (10.31)	.280 (7.11)
114	A1			4	B							3.875 (98.43)	.500 (12.70)	.310 (7.87)
115	A1			2	C							3.875 (98.43)	.343 (8.71)	.250 (6.35)
116	A1			3	C							3.875 (98.43)	.406 (10.31)	.280 (7.11)
117	A1	18	a	4	C	1.486 (37.74)	2.972 (75.49)	1.562 (39.67)	3.125 (79.38)	1.703 (43.26)	3.406 (86.51)	3.875 (98.43)	.500 (12.70)	.310 (7.87)
118	A2			2	A							3.736 (94.89)	.343 (8.71)	.250 (6.35)
119	A2			3	A							3.736 (94.89)	.406 (10.31)	.280 (7.11)
120	A2			4	A							3.736 (94.89)	.500 (12.70)	.310 (7.87)
121	A2			2	B							3.875 (98.43)	.343 (8.71)	.250 (6.35)
122	A2			3	B							3.875 (98.43)	.406 (10.31)	.280 (7.11)
123	A2			4	B							3.875 (98.43)	.500 (12.70)	.310 (7.87)
124	A2			2	C							3.875 (98.43)	.343 (8.71)	.250 (6.35)
125	A2			3	C							3.875 (98.43)	.406 (10.31)	.280 (7.11)
126	A2			4	C							3.875 (98.43)	.500 (12.70)	.310 (7.87)

1/ Millimeters are in parentheses.

TABLE I. Connector, electrical, receptacle, card insertion. -Continued

Dash number	Type	Style	Class	Size	Mounting provisions	Dimensions (inches) 1/ A ±.003 (±.08)	B ±.006 (±.15)	C ±.016 (±.41)	D ±.032 (±.81)	E ±.004 (±.10)	F ±.008 (±.20)	H (max)	J ±.010 (±.25)	K (max)
127			a	2	A							3.736 (94.89)	.343 (8.71)	.250 (6.35)
128			a	3	A							3.736 (94.89)	.406 (10.31)	.280 (7.11)
129			a	4	A							3.736 (94.89)	.500 (12.70)	.310 (7.87)
130			a	2	B							3.875 (98.43)	.343 (8.71)	.250 (6.35)
131			a	3	B							3.875 (98.43)	.406 (10.31)	.280 (7.11)
132			a	4	B							3.875 (98.43)	.500 (12.70)	.310 (7.87)
133			a	2	C							3.875 (98.43)	.343 (8.71)	.250 (6.35)
134			a	3	C							3.875 (98.43)	.406 (10.31)	.280 (7.11)
135	AD	18	a	4	C	1.486 (37.74)	2.972 (75.49)	1.562 (39.67)	3.125 (79.38)	1.703 (43.26)	3.406 (86.51)	3.875 (98.43)	.500 (12.70)	.310 (7.87)
136			b	2	A							3.736 (94.89)	.343 (8.71)	.250 (6.35)
137			b	3	A							3.736 (94.89)	.406 (10.31)	.280 (7.11)
138			b	4	A							3.736 (94.89)	.500 (12.70)	.310 (7.87)
139			b	2	B							3.875 (98.43)	.343 (8.71)	.250 (6.35)
140			b	3	B							3.875 (98.43)	.406 (10.31)	.280 (7.11)
141			b	4	B							3.875 (98.43)	.500 (12.70)	.310 (7.87)
142			b	2	C							3.875 (98.43)	.343 (8.71)	.250 (6.35)
143			b	3	C							3.875 (98.43)	.406 (10.31)	.280 (7.11)
144			b	4	C							3.875 (98.43)	.500 (12.70)	.310 (7.87)

1/ Millimeters are in parentheses.

TABLE I. Connector, electrical, receptacle, card insertion. -Continued

Dash number	Type	Style	Class	Size	Mounting provision	Dimensions (inches) 1/ A ±.004 (±.10)	B ±.008 (±.20)	C ±.016 (±.41)	D ±.032 (±.81)	E ±.004 (±.10)	F ±.008 (±.20)	H (max)	J ±.010 (±.25)	K (max)
145	A1			2	A							4.360 (110.74)	.343 (8.71)	.250 (6.35)
146	A1			3	A							4.360 (110.74)	.406 (10.31)	.280 (7.11)
147	A1			4	A							4.360 (110.74)	.500 (12.70)	.310 (7.87)
148	A1			2	B							4.500 (114.30)	.343 (8.71)	.250 (6.35)
149	A1			3	B							4.500 (114.30)	.406 (10.31)	.280 (7.11)
150	A1			4	B							4.500 (114.30)	.500 (12.70)	.310 (7.87)
151	A1			2	C							4.500 (114.30)	.343 (8.71)	.250 (6.35)
152	A1			3	C							4.500 (114.30)	.406 (10.31)	.280 (7.11)
153	A1	22	a	4	C	1.798 (45.67)	3.596 (91.34)	1.875 (47.63)	3.750 (95.25)	2.016 (51.21)	4.032 (102.41)	4.500 (114.30)	.500 (12.70)	.310 (7.87)
154	A2			2	A							4.360 (110.74)	.343 (8.71)	.250 (6.35)
155	A2			3	A							4.360 (110.74)	.406 (10.31)	.280 (7.11)
156	A2			4	A							4.360 (110.74)	.500 (12.70)	.310 (7.87)
157	A2			2	B							4.500 (114.30)	.343 (8.71)	.250 (6.35)
158	A2			3	B							4.500 (114.30)	.406 (10.31)	.280 (7.11)
159	A2			4	B							4.500 (114.30)	.500 (12.70)	.310 (7.87)
160	A2			2	C							4.500 (114.30)	.343 (8.71)	.250 (6.35)
161	A2			3	C							4.500 (114.30)	.406 (10.31)	.280 (7.11)
162	A2			4	C							4.500 (114.30)	.500 (12.70)	.310 (7.87)

1/ Millimeters are in parentheses.

TABLE I. Connector, electrical, receptacle, card insertion. -Continued

Dash number	Type	Style	Class	Size	Mounting provision	Dimensions (inches) 1/ A ±.004 (±.10)	B ±.008 (±.20)	C ±.016 (±.41)	D ±.032 (±.81)	E ±.004 (±.10)	F ±.008 (±.20)	H (max)	J ±.010 (±.25)	K (max)
163			a	2	A							4.360 (110.74)	.343 (8.71)	.250 (6.35)
164			a	3	A							4.360 (110.74)	.406 (10.31)	.280 (6.35)
165			a	4	A							4.360 (110.74)	.500 (12.70)	.310 (7.87)
166			a	2	B							4.500 (114.30)	.343 (8.71)	.250 (6.35)
167			a	3	B							4.500 (114.30)	.406 (10.31)	.280 (7.11)
168			a	4	B							4.500 (114.30)	.500 (12.70)	.310 (7.87)
169			a	2	C							4.500 (114.30)	.343 (8.71)	.250 (6.35)
170			a	3	C							4.500 (114.30)	.406 (10.31)	.280 (7.11)
171	AD	22	a	4	C	1.798 (45.67)	3.596 (91.34)	1.875 (47.63)	3.750 (95.25)	2.016 (51.21)	4.032 (102.41)	4.500 (114.30)	.500 (12.70)	.310 (7.87)
172			b	2	A							4.360 (110.74)	.343 (8.71)	.250 (6.35)
173			b	3	A							4.360 (110.74)	.406 (10.31)	.280 (7.11)
174			b	4	A							4.360 (110.74)	.500 (12.70)	.310 (7.87)
175			b	2	B							4.500 (114.30)	.343 (8.71)	.250 (6.35)
176			b	3	B							4.500 (114.30)	.406 (10.31)	.280 (7.11)
177			b	4	B							4.500 (114.30)	.500 (12.70)	.310 (7.87)
178			b	2	C							4.500 (114.30)	.343 (8.71)	.250 (6.35)
179			b	3	C							4.500 (114.30)	.406 (10.31)	.280 (7.11)
180			b	4	C							4.500 (114.30)	.500 (12.70)	.310 (7.87)

1/ Millimeters are in parentheses.

TABLE I. Connector, electrical, receptacle, card insertion. -Continued

Dash number	Type	Style	Class	Size	Mounting provisions	Dimensions (inches) 1/ A ±.005 (±.13)	B ±.010 (±.25)	C ±.016 (±.41)	D ±.032 (±.81)	E ±.008 (±.20)	F ±.016 (±.41)	H (max)	J ±.010 (±.25)	K (max)
181	A1			2	A							5.284 (134.21)	.500 (12.70)	.250 (6.35)
182	A1			3	A							5.284 (134.21)	.562 (14.27)	.280 (7.11)
183	A1			4	A							5.284 (134.21)	.593 (15.06)	.310 (7.87)
184	A1			2	B							5.424 (137.77)	.500 (12.70)	.250 (6.35)
185	A1			3	B							5.424 (137.77)	.562 (14.27)	.210 (7.11)
186	A1			4	B							5.424 (137.77)	.593 (15.06)	.310 (7.87)
187	A1			2	C							5.424 (137.77)	.500 (12.70)	.250 (6.35)
188	A1			3	C							5.424 (137.77)	.562 (14.27)	.280 (7.11)
189	A1	28	a	4	C	2.266 (57.56)	4.532 (115.11)	2.326 (59.08)	4.652 (118.16)	2.482 (63.04)	4.964 (126.09)	5.424 (137.77)	.593 (15.06)	.310 (7.87)
190	A2			2	A							5.284 (134.21)	.500 (12.70)	.250 (6.35)
191	A2			3	A							5.284 (134.21)	.562 (14.27)	.280 (7.11)
192	A2			4	A							5.284 (134.21)	.593 (15.06)	.310 (7.87)
193	A2			2	B							5.424 (137.77)	.500 (12.70)	.250 (6.35)
194	A2			3	B							5.424 (137.77)	.562 (14.27)	.280 (7.11)
195	A2			4	B							5.424 (137.77)	.593 (15.06)	.310 (7.87)
196	A2			2	C							5.424 (137.77)	.500 (12.70)	.250 (6.35)
197	A2			3	C							5.424 (137.77)	.562 (14.27)	.280 (7.11)
198	A2			4	C							5.424 (137.77)	.593 (15.06)	.310 (7.87)

1/ Millimeters are in parentheses.

TABLE I. Connector, electrical, receptacle, card insertion. -Continued

Dash number	Type	Style	Class	Size	Mounting provisions	Dimensions (inches) 1/ A ±.005 (±.13)	B ±.010 (±.25)	C ±.016 (±.41)	D ±.032 (±.81)	E ±.008 (±.20)	F ±.016 (±.41)	H (max)	J ±.010 (±.25)	K (max)
199			a	2	A							5.284 (134.21)	.500 (12.70)	.250 (6.35)
200			a	3	A							5.284 (134.21)	.562 (14.27)	.280 (7.11)
201			a	4	A							5.284 (134.21)	.593 (15.06)	.310 (7.87)
202			a	2	B							5.424 (137.77)	.500 (12.70)	.250 (6.35)
203			a	3	B							5.424 (137.77)	.562 (14.27)	.280 (7.11)
204			a	4	B							5.424 (137.77)	.593 (15.06)	.310 (7.87)
205			a	2	C							5.424 (137.77)	.500 (12.70)	.250 (6.35)
206			a	3	C							5.424 (137.77)	.562 (14.27)	.280 (7.11)
207	AD	28	a	4	C	2.266 (57.56)	4.532 (115.11)	2.326 (59.08)	4.652 (118.16)	2.482 (63.04)	4.964 (126.09)	5.424 (137.77)	.593 (15.06)	.310 (7.87)
208			b	2	A							5.284 (134.21)	.500 (12.70)	.250 (6.35)
209			b	3	A							5.284 (134.21)	.562 (14.27)	.280 (7.11)
210			b	4	A							5.284 (134.21)	.593 (15.06)	.310 (7.87)
211			b	2	B							5.424 (137.77)	.500 (12.70)	.250 (6.35)
212			b	3	B							5.424 (137.77)	.562 (14.27)	.280 (7.11)
213			b	4	B							5.424 (137.77)	.593 (15.06)	.310 (7.87)
214			b	2	C							5.424 (137.77)	.500 (12.70)	.250 (6.35)
215			b	3	C							5.424 (137.77)	.562 (14.27)	.280 (7.11)
216			b	4	C							5.424 (137.77)	.593 (15.06)	.310 (7.87)

1/ Millimeters are in parentheses.

TABLE I. Connector, electrical, receptacle, card insertion. -Continued

Dash number	Type	Style	Class	Size	Mounting provisions	Dimensions (inches) 1/ A ±.005 (±.13)	B ±.010 (±.25)	C ±.016 (±.41)	D ±.032 (±.81)	E ±.008 (±.20)	F ±.016 (±.41)	H (max)	J ±.010 (±.25)	K (max)
217	A1			2	A							6.543 (166.19)	.500 (12.70)	.250 (6.35)
218	A1			3	A							6.543 (166.19)	.562 (14.27)	.280 (7.11)
219	A1			4	A							6.543 (166.19)	.593 (15.06)	.310 (7.87)
220	A1			2	B							6.693 (170.00)	.500 (12.70)	.250 (6.35)
221	A1			3	B							6.693 (170.00	.562 (14.27)	.280 (7.11)
222	A1			4	B							6.693 (170.00)	.593 (15.06)	.310 (7.87)
223	A1			2	C							6.693 (170.00)	.500 (12.70)	.250 (6.35)
224	A1			3	C							6.693 (170.00)	.562 (14.27)	.280 (7.11)
225	A1	36	a	4	C	2.889 (73.38)	5.778 (146.76)	2.950 (74.93)	5.900 (149.86)	3.110 (78.99)	6.220 (157.99)	6.693 (170.00)	.593 (15.06)	.310 (7.87)
226	A2			2	A							6.543 (166.19)	.500 (12.70)	.250 (6.25)
227	A2			3	A							6.543 (166.19)	.562 (14.27)	.280 (7.11)
228	A2			4	A							6.543 (166.19)	.593 (15.06)	.310 (7.87)
229	A2			2	B							6.693 (170.00)	.500 (12.70)	.250 (6.25)
230	A2			3	B							6.693 (170.00)	.562 (14.27)	.280 (7.11)
231	A2			4	B							6.693 (170.00)	.593 (15.06)	.310 (7.87)
232	A2			2	C							6.693 (170.00)	.500 (12.70)	.250 (6.25)
233	A2			3	C							6.693 (170.00)	.562 (14.27)	.280 (7.11)
234	A2			4	C							6.693 (170.00)	.593 (15.06)	.310 (7.87)

1/ Millimeters are in parentheses.

TABLE I. Connector, electrical, receptacle, card insertion. -Continued

Dash number	Type	Style	Class	Size	Mounting provisions	Dimensions (inches) 1/ A ±.005 (±.13)	B ±.010 (±.25)	C ±.016 (±.41)	D ±.032 (±.81)	E ±.008 (±.20)	F ±.016 (±.41)	H (max)	J ±.010 (±.25)	K (max)
235			a	2	A							6.543 (166.19)	.500 (12.70)	.250 (6.35)
236			a	3	A							6.543 (166.19)	.562 (14.27)	.280 (7.11)
237			a	4	A							6.543 (166.19)	.593 (15.06)	.310 (7.87)
238			a	2	B							6.693 (170.00)	.500 (12.70)	.250 (6.35)
239			a	3	B							6.693 (170.00)	.562 (14.27)	.280 (7.11)
240			a	4	B							6.693 (170.00)	.593 (15.06)	.310 (7.87)
241			a	2	C							6.693 (170.00)	.500 (12.70)	.250 (6.35)
242			a	3	C							6.693 (170.00)	.562 (14.27)	.280 (7.11)
243	AD	36	a	4	C	2.889 (73.38)	5.778 (146.76)	2.950 (74.93)	5.900 (149.86)	3.110 (78.99)	6.220 (157.99)	6.693 (170.00)	.593 (15.06)	.310 (7.87)
244			b	2	A							6.543 (166.19)	.500 (12.70)	.250 (6.35)
245			b	3	A							6.543 (166.19)	.562 (14.27)	.280 (7.11)
246			b	4	A							6.543 (166.19)	.593 (15.06)	.310 (7.87)
247			b	2	B							6.693 (170.00)	.500 (12.70)	.250 (6.35)
248			b	3	B							6.693 (170.00)	.562 (14.27)	.280 (7.11)
249			b	4	B							6.693 (170.00)	.593 (15.06)	.310 (7.87)
250			b	2	C							6.693 (170.00)	.500 (12.70)	.250 (6.35)
251			b	3	C							6.693 (170.00)	.562 (14.27)	.280 (7.11)
252			b	4	C							6.693 (170.00)	.593 (15.06)	.310 (7.87)

1/ Millimeters are in parentheses.

TABLE I. Connector, electrical, receptacle, card insertion. -Continued

Dash number	Type	Style	Class	Size	Mounting provisions	Dimensions (inches) 1/ A ±.005 (±.13)	B ±.010 (±.25)	C ±.016 (±.41)	D ±.032 (±.81)	E ±.008 (±.20)	F ±.016 (±.41)	H (max)	J ±.010 (±.25)	K (max)
253	A1			2	A							7.631 (193.83)	.500 (12.70)	.250 (6.35)
254	A1			3	A							7.631 (193.83)	.562 (14.27)	.280 (7.11)
255	A1			4	A							7.631 (193.83)	.593 (15.06)	.310 (7.87)
256	A1			2	B							7.781 (197.64)	.500 (12.70)	.250 (6.35)
257	A1			3	B							7.781 (197.64)	.562 (14.27)	.280 (7.11)
258	A1			4	B							7.781 (197.64)	.593 (15.06)	.310 (7.87)
259	A1			2	C							7.781 (197.64)	.500 (12.70)	.250 (6.35)
260	A1			3	C							7.781 (197.64)	.562 (14.27)	.280 (7.11)
261	A1	43	a	4	C	3.436 (87.27)	6.872 (174.55)	3.500 (88.90)	7.000 (177.8)	3.651 (92.74)	7.302 (185.47)	7.781 (197.64)	.593 (15.06)	.310 (7.87)
262	A2			2	A							7.631 (193.83)	.500 (12.70)	.250 (6.35)
263	A2			3	A							7.631 (193.83)	.562 (14.27)	.280 (7.11)
264	A2			4	A							7.631 (193.83)	.593 (15.06)	.310 (7.87)
265	A2			2	B							7.781 (197.64)	.500 (12.70)	.250 (6.35)
266	A2			3	B							7.781 (197.64)	.562 (14.27)	.280 (7.11)
267	A2			4	B							7.781 (197.64)	.593 (15.06)	.310 (7.87)
268	A2			2	C							7.781 (197.64)	.500 (12.70)	.250 (6.35)
269	A2			3	C							7.781 (197.64)	.562 (14.27)	.280 (7.11)
270	A2			4	C							7.781 (197.64)	.593 (15.06)	.310 (7.87)

1/ Millimeters are in parentheses.

TABLE I. Connector, electrical, receptacle, card insertion. -Continued

Dash number	Type	Style	Class	Size	Mounting provisions	Dimensions (inches) 1/ A ±.005 (±.13)	B ±.010 (±.25)	C ±.016 (±.41)	D ±.032 (±.81)	E ±.008 (±.20)	F ±.016 (±.41)	H (max)	J ±.010 (±.25)	K (max)
271			a	2	A							7.631 (193.83)	.500 (12.70)	.250 (6.35)
272			a	3	A							7.631 (193.83)	.562 (14.27)	.280 (7.11)
273			a	4	A							7.631 (193.83)	.593 (15.06)	.310 (7.87)
274			a	2	B							7.781 (197.64)	.500 (12.70)	.250 (6.35)
275			a	3	B							7.781 (197.64)	.562 (14.27)	.280 (7.11)
276			a	4	B							7.781 (197.64)	.593 (15.06)	.310 (7.87)
277			a	2	C							7.781 (197.64)	.500 (12.70)	.250 (6.35)
278			a	3	C							7.781 (197.64)	.562 (14.27)	.280 (7.11)
279	AD	43	a	4	C	3.436 (87.27)	6.872 (174.55)	3.500 (88.90)	7.000 (177.8)	3.651 (92.74)	7.302 (185.47)	7.781 (197.64)	.593 (15.06)	.310 (7.87)
280			b	2	A							7.631 (193.83)	.500 (12.70)	.250 (6.35)
281			b	3	A							7.631 (193.83)	.562 (14.27)	.280 (7.11)
282			b	4	A							7.631 (193.83)	.593 (15.06)	.310 (7.87)
283			b	2	B							7.781 (197.64)	.500 (12.70)	.250 (6.35)
284			b	3	B							7.781 (197.64)	.562 (14.27)	.280 (7.11)
285			b	4	B							7.781 (197.64)	.593 (15.06)	.310 (7.87)
286			b	2	C							7.781 (197.64)	.500 (12.70)	.250 (6.35)
287			b	3	C							7.781 (197.64)	.562 (14.27)	.280 (7.11)
288			b	4	C							7.781 (197.64)	.593 (15.06)	.310 (7.87)

1/ Millimeters are in parentheses.

REQUIREMENTS:

Dimensions and configurations: See figure 1 and table I.

Polarizing key slots: For contact polarization, shall be centered between contact positions; and shall accept keys, part numbers M21097/11-08, -09, and -10, depending upon the size of the printed wiring board. Four polarization keys, part number M21097/11-08, -09, or -10, as applicable, shall be supplied uninstalled with each receptacle.

Part number: M21097/21- (dash number from table I).

Qualification of MIL-C-21097/21 connectors shall qualify MIL-C-21097/1 connectors.

Ⓐ Qualification and group B inspection: When connector assemblies covering a range of styles, types, mountings and classes with the same design are submitted for inspection at the same time, the requirements of table II apply.

Ⓐ TABLE II. Group submission.

Dash number 1/	Samples (Inspection per tables IX and XII in MIL-C-21097)			
	Group I	Group II	Group III	Group IV
253	1		1	
262	1		1	
274		1		1 3/
286		1		1 3/
010	2			
019		2 2/		
049	2			
055		2 2/		
088	2			
091		2 2/		
118	2			
127		2 2/		
157	2			
163		2 2/		
196	2			
199		2 2/		
226	2			
235		2 2/		

NOTES: 1/ Table shows sample selection for size 2, style 6 (shortest) connector to style 43 (longest) connector. For test programs not including the full range of styles or covering features of type or size not covered by this table, the test program shall be established in accordance with the guidelines reflected in this table.

2/ Only the following tests of group II are applicable:
Visual and mechanical examination
Board insertion force
Durability

3/ Not applicable for group B inspection.

Custodians:
Army - EL
Navy - EC
Air Force - 17

Review activities:
Army - MI, MU, AT
Air Force - 80, 85
DSA - ES

User activities:
Army - ME, AV, WC
Navy - MC, OS, SH

Preparing activity:
Navy - EC

Agent:
DSA - ES

(Project 5935-1911-2)