MILITARY SPECIFICATION SHEET

CONNECTORS, ELECTRICAL, PRINTED WIRING BOARD COMPOSITE, RECEPTACLE, CONTACT SPACING (.200), ALTERNATE DUAL ROW, TYPE CR

This specification is approved for use by all Departments and Agencies of the Department of Defense.

The complete requirements for procuring the connectors described herein shall consist of this document and the latest issue of Specification MIL-C-21097

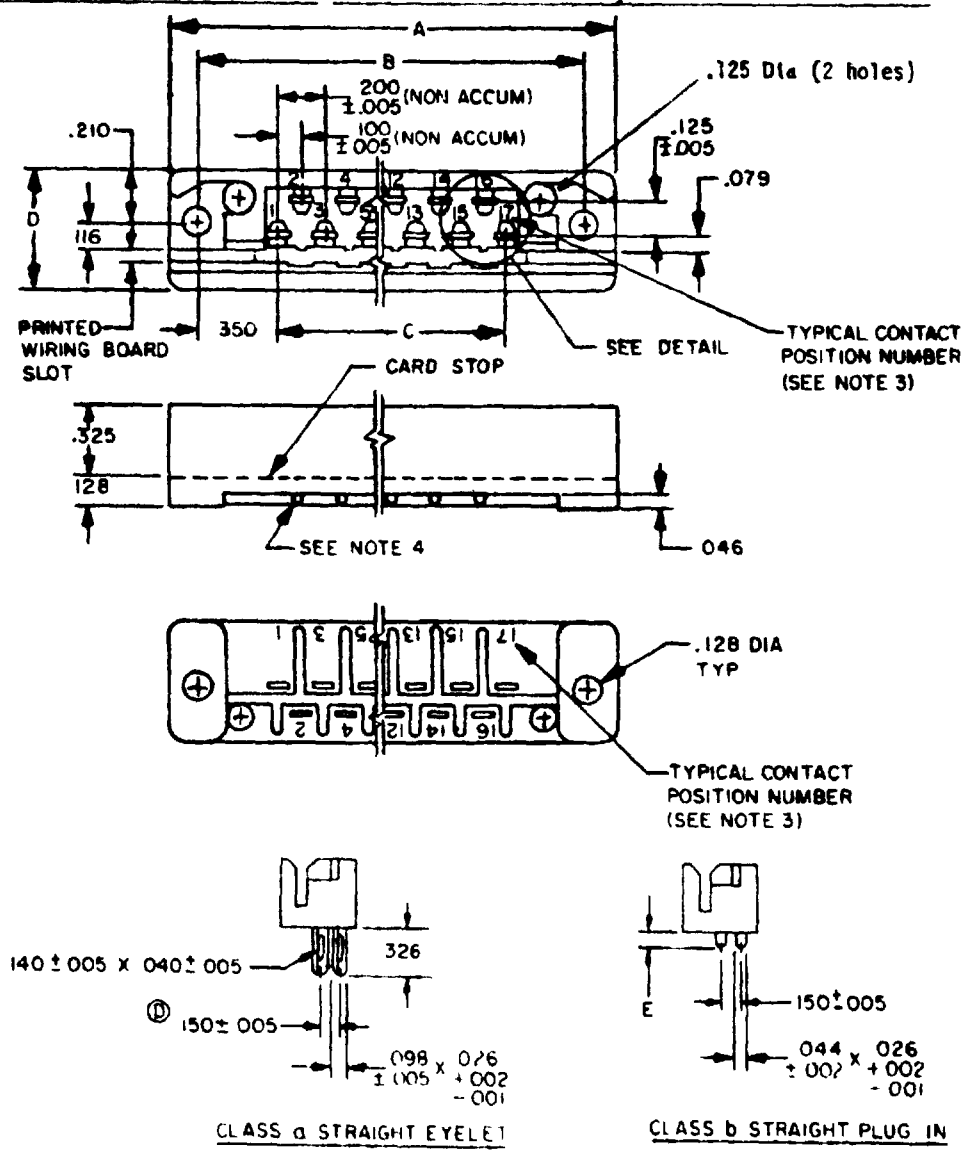

FIGURE 1. Dual row contacts, type CR

(E) denotes changes

FSC 5935

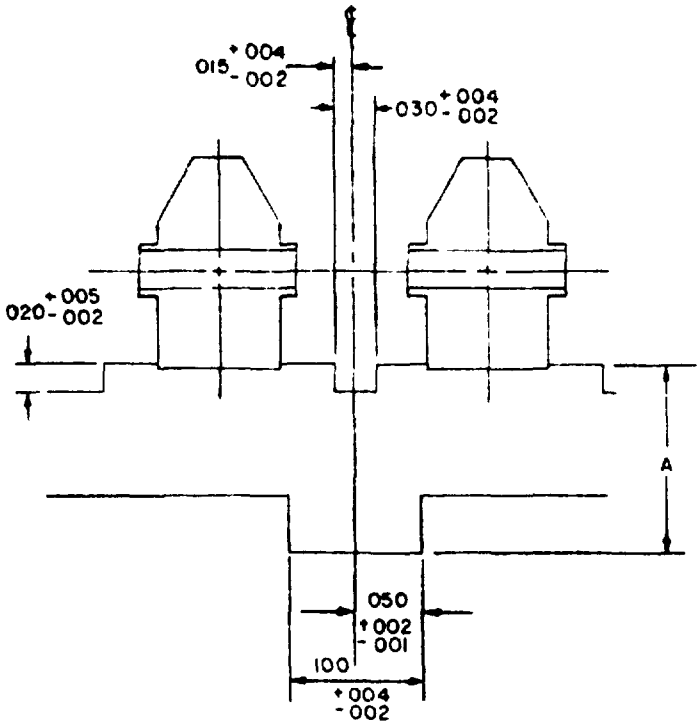

DETAIL

Polarizing cavity for even number of contact positions

INCHES	MM	INCHES	MM
.001	.03	.098	2.49
.002	.05	.100	2.54
.004	.10	.116	2.95
005	.13	.125	3.18
.015	.38	.128	3.25
.020	.51	.140	3.56
.026	.66	.150	3.81
.030	.76	.200	5.08
.040	1.02	.210	5.33
.044	1.12	.325	8.26
.046	1.17	.326	8.28
.050	1.27	.350	8.89
.079	2.01		

Board guide	A dim +.002 (.05) -.004 (.10)
.06 (1.52)	.119 (3.02)
.09 (2.29)	.150 (3.81)

NOTES:
1. Dimensions are in inches.
2. Unless otherwise specified, tolerance is ±.010 (.25 mm) for three place decimals.
3. Contacts and terminals shall be designated on the connector using numerals in the locations shown.
4. The shape of the barriers is optional except that barriers shall not protrude beyond the plane of the underside of the mounting flange.
5. Slot shall accept the following thickness printed wiring boards
   Size 2 - .054 (1.37 mm) to .071 (1.80 mm).
   Size 3 - .086 (2.18 mm) to .103 (2.62 mm).
   Slot shall prevent entry of printed wiring board having greater than the following thicknesses
   Size 2 - 084 (2.13 mm)
   Size 3 - .113 (2.87 mm).
6. Metric equivalents (to the nearest .01 mm) are given for general information only and are based upon 1 inch = 25.4 mm.
7. Millimeters are in parentheses.

FIGURE 1 Dual row contacts, type CR - Continued.

REQUIREMENTS:

Dimensions and configuration. See figure 1 and table I.

Polarizing keys: Part no. M21097/11-03 or M21097/11-04. A key is inserted into the card slot at even contact numbers, 2, 4, 6, etc.

Mating male adapters: Shall conform to MIL-C-21097/5.

(E) Finish. Gold plating per MIL-G-45204, type II, grade D, class 1, over nickel plating per QQ-N-290, class 2, 30 to 150 microinches.

Part number: M21097/4- (dash number from table I).

TABLE I. Connector, electrical, composite, receptacle, type CR, mounting provision A.

Dash number	Style	Class	Size	Dimensions (inches) 1/				
				A (maximum)	B ±0.015 (0.38)	C ±0.005 (0.13)	D ±0.010 (0.25)	E ±0.010 (0.25)
01		a	2					
02		a	3					
03		b	2					.123 (3.12)
04	17	b	2	2.570 (65.28)	2.300 (58.42)	1.600 (40.64)	0.531 (13.49)	.154 (3.91)
05		b	2					.186 (4.72)
06		b	3					.123 (3.12)
07		b	3					.154 (3.91)
08		b	3					.186 (4.72)
09		a	2					
10		a	3					
11		b	2					.123 (3.12)
12		b	2					.154 (3.91)
13	23	b	2	3.170 (80.52)	2.900 (73.66)	2.200 (55.88)	0.531 (13.49)	.186 (4.72)
14		b	3					.123 (3.12)
15		b	3					.154 (3.91)
16		b	3					.186 (4.72)

1/ Millimeters are in parentheses.

TABLE I Connector, electrical, composite, receptacle, type CR, mounting provision A. -Continued

Dash number	Style	Class	Size	Dimensions (inches) [1] A (maximum)	B 0.015 (0.38)	C ±0.005 (0.13)	D ±0.010 (0.25)	E ±0.010 (0.25)
17		a	2					
18		a	3					
19		b	2					.123 (3.12)
20		b	2					.154 (3.91)
21	29	b	2	3.770 (95.76)	3.500 (88.90)	2.800 (71.12)	0.531 (13.49)	.186 (4.72)
22		b	3					.123 (3.12)
23		b	3					.154 (3.91)
24		b	3					.186 (4.72)
25		a	2					
26		a	3					
27		b	2					.123 (3.12)
28		b	2	4.370 (111.00)	4.100 (104.14)	3.400 (86.36)	0.531 (13.49)	.154 (3.91)
29	35	b	2					.186 (4.72)
30		b	3					.123 (3.12)
31		b	3					.154 (3.91)
32		b	3					.186 (4.72)
33		a	2					
34		a	3					
35		b	2	4.970 (126.24)	4.700 (119.38)	4.000 (101.6)	0.531 (13.49)	.123 (3.12)
36	41	b	2					.154 (3.91)
37		b	2					.186 (4.72)
38		b	3					.123 (3.12)
39		b	3					.154 (3.91)
40		b	3					.186 (4.72)

[1] Millimeters are in parentheses

Custodians:
Army - EL
Navy - EC
Air Force - 11

Review activities:
Army - MI
Navy - AS
Air Force -
DSA - ES

User activities:
Army - MU, ME, AV, AT, WC
Navy - SH, MC, OS
Air Force -

Preparing activity:
Navy - EC

Agent:
DSA - ES

(Project 5935-2057-3)