MIL-C-22992E
28 August 1974
SUPERSEDING
MIL-C-22992D
2 February 1972

MILITARY SPECIFICATION

CONNECTORS, PLUGS AND RECEPTACLES, ELECTRICAL, WATERPROOF, QUICK DISCONNECT, HEAVY DUTY TYPE GENERAL SPECIFICATION FOR

This specification is approved for use by all Departments and Agencies of the Department of Defense

1. SCOPE

1.1 Scope This specification covers multicontact heavy duty, quick disconnect, waterproof, electrical plug and receptacle connectors and associated accessories for electronic and electrical power and control circuits Connectors are rated for -55°C to +125°C (see 6 1).

1.2 Classification Electrical connectors and accessories shall be of the following types, classes, sizes, styles and arrangements, as specified (see 3 1)

1 2 1 Types

1 2 1 1 Plugs.

(a) Cable connecting plug (without coupling ring).
(b) Straight plug

1 2 1 2 Receptacles

(a) Wall mounting receptacle
(b) Box mounting receptacle
(c) Jam nut receptacle
(d) Jam nut receptacle (box)
(e) Wall mounting receptacle (with coupling ring - class L only)

1 2 1 3 Accessories

(a) Cover, protective, receptacle (types A and B)
(b) Cover, protective, plug
(c) Receptacle, dummy stowage
(d) Adapter, straight thru, cable sealing
    Style 1 (types A and B)
    Style 2 (types A and B)
(e) Adapter, step down, cable sealing
    Style 1 (types A and B)
    Style 2 (types A and B)
(f) Adapter, step up, cable sealing
    Style 1 (types A and B)
    Style 2 (types A and B)

1 2 2 Classes, connectors

Class C - Pressurized
Class J - Pressurized with grommet
Class L - Arc quenching (see 6 3 1 and appendix)
Class R - Environment resisting

1 2 3 Sizes Connector and accessory sizes shall be as specified (see 3 1)

1 2 4 Styles, connectors

Style P - Inserts containing pin contacts
Style S - Inserts containing socket contacts

1 2 5 Arrangements, connectors Arrangements shall be as specified (see 3 1)

1.3 Military part number Connectors covered by this specification shall be identified as specified (see 3 1)

2 APPLICABLE DOCUMENTS

2 1 The following documents, of the issue in effect on date of invitation for bids or request for proposal, form a part of this specification to the extent specified herein

SPECIFICATIONS

FEDERAL

QQ-N-290 - Nickel Plating (Electrodeposited).
QQ-P-416 - Plating, Cadmium (Electrodeposited)
QQ-S-365 - Silver Plating, Electrodeposited, General Requirements for.

MILITARY

MIL-C-915 - Cable and Cord, Electrical, For Shipboard Use, General Specification for.
MIL-D-1000 - Drawings, Engineering and Associated Data
MIL-R-3065 - Rubber, Fabricated Products
MIL-C-3432 - Cable and Wire, Electrical (Power and Control, Semi-flexible, Flexible, and Extra-flexible, 300 and 600 Volts)
MIL-H-5606 - Hydraulic Fluid, Petroleum Base, Aircraft, Missile, and Ordnance
MIL-S-7742 - Screw Threads, Standard, Optimum Selected Series General Specification for
MIL-C-13777 - Cable, Special Purpose, Electrical General Specification for
MIL-F-14072 - Finishes for Ground Signal Equipment
MIL-I-17214 - Indicator, Permeability, Low-Mu (Go-No-Go)
MIL-L-23699 - Lubricating Oil, Aircraft Turbine Engines, Synthetic Base
MIL-G-23827 - Grease, Aircraft and Instrument, Gear and Actuator Screw
MIL-C-26074 - Coatings, Electroless Nickel, Requirements for
MIL-G-45204 - Gold Plating, Electrodeposited
MIL-C-45662 - Calibration System Requirements
MIL-C-55330 - Connectors, Preparation for Delivery of.

STANDARDS

MIL-STD-105 - Sampling Procedures and Tables for Inspection by Attributes
MIL-STD-202 - Test Methods for Electronic and Electrical Component Parts
MIL-STD-454 - Standard General Requirements for Electronic Equipment
MIL-STD-1285 - Marking of Electrical and Electronic Parts
MIL-STD-1344 - Test Methods for Electrical Connectors
MIL-STD-1353 - Electrical Connectors and Associated Hardware, Selection and use of
MIL-STD-1373 - Screw-Thread, Modified, 60° Stud, Double
MS3197 - Gage Pin, for Socket Contact Engagement Test
MS33681 - Insert Arrangements, MIL-C-5015 Electric Connector, Size 12
MS33682 - Insert Arrangements, MIL-C-5015 Electric Connector, Size 14
MS33683 - Insert Arrangements, MIL-C-5015 Electric Connector, Size 16
MS33684 - Insert Arrangements, MIL-C-5015 Electric Connector, Size 18
MS33685 - Insert Arrangements, MIL-C-5015 Electric Connector, Size 20
MS33686 - Insert Arrangements, MIL-C-5015 Electric Connector, Size 22
MS33687 - Insert Arrangements, MIL-C-5015 Electric Connector, Size 24

MS33688 - Insert Arrangements, MIL-C-5015 Electric Connector, Size 28
MS33689 - Insert Arrangements, MIL-C-5015 Electric Connector, Size 32
MS33690 - Insert Arrangements, MIL-C-5015 Electric Connector, Size 36
MS33691 - Insert Arrangements, MIL-C-5015 Electric Connector, Size 40.

(See supplement for list of applicable military standards)

(Copies of specifications, standards, drawings, and publications required by suppliers in connection with specific procurement functions should be obtained from the procuring activity or as directed by the contracting officer)

2.2 Other publications The following documents form a part of this specification to the extent specified herein Unless otherwise indicated, the issue in effect on date of invitation for bids or request for proposal shall apply

AEROSPACE MATERIALS SPECIFICATION

AMS 4027 - Aluminum Alloys, Sheet and Plate (AA-6061-T6).

(Applications for copies should be addressed to the Society of Automotive Engineers, 2 Pennsylvania Plaza, New York, NY 10001.)

NATIONAL BUREAU OF STANDARDS

Handbook H-28 - Screw-Thread Standards for Federal Services

(Applications for copies should be addressed to the Superintendent of Documents, Government Printing Office, Washington, D.C 20402)

INSULATED POWER CABLE ENGINEERING ASSOCIATION PUBLICATION

IPCEA Publication No. S-19-81 - Rubber-Insulated Wire and Cable for the Transmission and Distribution of Electrical Energy

(Application for copies should be addressed to the Insulated Power Cable Engineers Association, 192 Washington St , Belmont, MA 02178)

Technical society and technical association specifications and standards are generally available for reference from libraries They are also distributed among technical groups and using Federal agencies

3. REQUIREMENTS

3 1 Military standards (MS) The individual item requirements shall be as specified herein, and in accordance with the applicable military standards. In the event of any conflict between requirements of this specification and the military standards, the latter shall govern

3 2 Qualification The connectors, adapters, protective covers, and stowage receptacles furnished under this specification shall be products which are qualified for listing on the applicable qualified products list at the time set for opening of bids (see 6 4)

3 3 Materials The materials shall be as specified herein However, when a definite material is not specified, a material shall be used which will enable the connectors and accessories to meet the performance requirements of this specification Acceptance or approval of any consitutent material shall not be construed as a guaranty of the acceptance of the finished product

3 3 1 Nonmagnetic materials All component parts shall be made from materials which are classed as nonmagnetic (see 3 5)

3 3 2 Dissimilar metals. When dissimilar metals are used in intimate contact with each other, protection against electrolysis and corrosion shall be provided The use of dissimilar metal in contact, which tends toward active electrolytic corrosion (particularly brass, copper, or steel used in contact with aluminum or aluminum alloy), is not acceptable However, metal spraying or metal plating of dissimilar base metals to provide similar or suitable abutting surfaces is permitted Dissimilar metals shall be as defined in 6 6 through 6 6 4 inclusive, and table XI

3 3.3 Shells and associated hardware. Shells, covers, coupling rings, stowage receptacles, and cable sealing adapters shall be fabricated from high grade aluminum alloys.

3.3 4 Insert materials

3.3.4 1 Resilient insert materials (classes C, J, and R) Resilient inserts shall be molded of a suitable dielectric material and shall conform to MIL-R-3065 The durometer hardness number shall be from 70 to 90

3 3 4 2 Plastic insert materials (class L) Plastic inserts shall be fabricated from a plastic dielectric and shall be capable of meeting the performance requirements of the class L connectors.

3 3 5 Contacts Contact basis material (except thermocouple contacts) shall be made of a suitable conductive copper alloy. Accessory members of the socket contact may be made of a suitable corrosion resistant material Thermocouple contacts shall be made of suitable thermocouple combinations as required.

3 3 6 Grommets and seals Grommets and seals shall be made of materials conforming to the applicable requirements of MIL-R-3065, and as specified (see 3 1)

3 3 7 Finish

3 3 7 1 Connectors and accessories Connectors, cable sealing adapters, protective covers and stowage receptacles shall be finished with an electrically conductive or electrically nonconductive finish as specified (see 3.1)

3.3 7 1 1 Conductive finish (C) The conductive finish shall be nickel plated in accordance with QQ-N-290 or MIL-C-26074 to a thickness of 0 0002-inch minimum, followed by cadmium plate in accordance with type II of QQ-P-416, to a thickness of 0 0001-inch minimum The resulting finish shall be olive drab (light to dark) in color and shall be electrically conductive Components of corrosion resistant materials need not be plated

3.3 7 1.2 Nonconductive finish (N) (classes C, J, R, and 28 Vdc class L only) The nonconductive finish shall be a hard, oxide coating conforming to finish E-516 of MIL-F-14072. The resulting finish shall be from dark grey to black in color and be electrically nonconductive Thickness of the coating shall be approximately 0.001-inch Components of corrosion resistant materials need not be coated

3 3 8 Contact plating

3 3.8.1 Size 12 and smaller All size 12 and smaller contacts shall be gold plated in accordance with type II, grade C, class 1 for pin contacts and type I, grade A, class 1 for socket contacts, of MIL-G-45204 Copper underplating shall be used Accessory members of the socket contacts (spring members, etc), as applicable, shall be of corrosion resistant material or suitably protected from corrosion

3 3 8 2 Size 8 and larger All size 8 and larger contacts shall be silver plated to a thickness of 0 0002 inch minimum in accordance with QQ-S-365 Use underplate of 0 00005 inch nickel minimum in accordance with QQ-N-290 Accessory members of the socket contacts (spring members, etc) as applicable, shall be of corrosion resistant material or suitably protected from corrosion

3 3 8 3 Thermocouple contacts Thermocouple contacts, except alumel and chromel, shall be cadmium plated in accordance with QQ-P-416 or otherwise suitably protected from corrosion. Accessory members of the socket contacts (spring members, etc), as applicable, shall be of corrosion resistant material or suitably protected from corrosion

3 3.9 Fungus-resistant Materials used in connectors shall be fungus inert (see requirement 4 of MIL-STD-454)

3 4 Design and construction. Connectors, adapters, protective covers and stowage receptacles shall be designed and constructed as specified (see 3.1)

3 4 1 Contact design. Contact design shall be such that neither the pins nor the sockets installed in the connector will be damaged by any possible twisting or forcing during the process of mating

3 4.1 1 Pin engaging end (classes C, J, and R) The entering end of pins shall be formed with a spherical radius approximately one-half the diameter of the pin, allowing for a flat in the center of the spherical development The diameter of the blunt end shall be in accordance with dimension K as shown in figure 1 Position of pin engaging end shall be in accordance with dimension H as shown in figure 1

3 4 1 2 Socket engaging end The entering end of the socket contact shall be rounded or chamfered to allow for directing and centering of the entering pin The socket contact shall provide the spring action for maintaining the contacting pressure between the pin and socket

3.4.1 2 1 Classes C, J, and R. Size 12 and smaller socket contacts shall be designed to exclude the entrance of a pin 0.005 inch larger than the allowable maximum diameter of a mating pin. The point of spring engagement of the socket contact with a nominal diameter mating square ended test pin shall not exceed the values shown in column J (see figure 1) when measured from the end of the shell

3 4 1 2 2 Class L. The point of spring engagement of the socket contact with a nominal diameter mating square ended test pin shall not exceed the values shown on the applicable military standard (see 3 1), when measured from the end of the shell.

3 4 1 3 Solder cups (classes C, J, and R) The location of the solder cup shall be such that normal soldering operations shall not impair any part of the assembly The solder cup shall be as indicated in figure 1 and the applicable MS (see 3.1) All solder cavities shall be designed so that liquid solder will not escape during normal soldering operations and interfere with the float of the contact, and constructed so liquid solder in the solder cup cannot leak through to the front of the socket and prevent insertion of the pin.

3 4 1 4 Dimensions. Contact dimensions of class C, J, and R shall conform to figure 1 Contact dimensions of class L shall conform to MS90559 or MS90560 The illustrations in figure 1 are for dimensional purposes only and are not intended to indicate design

3 4 1 5 Contact insertion and removal

3 4 1 5 1 Classes C, J, and R Pin and socket contacts, sizes 1/0, 4, and 8, may be designed so that they can be readily removed from their inserts for soldering to their conductors and readily assembled after the soldered connection has been made Contacts, sizes 12 and 16, shall be rigidly mounted in their inserts Inserts containing nonremovable contacts shall not be subject to damage by soldering under an acceptable soldering process

3 4 1 5 2 Class L Pin and socket contacts shall be capable of being readily assembled in the connectors after they have been attached to their conductors They shall also be capable of being removed from the connectors with the aid of removal tools as specified on MS90562 The inserts may be removed from their shell to allow the removal of the contacts

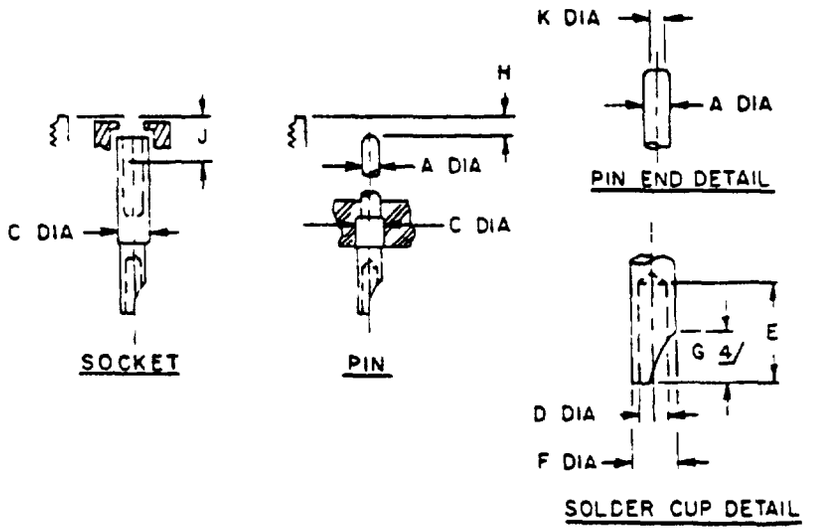

Contact controlled dimensions													
Contact size	A 1/	C	D	E	F 2/		H				J 3/		K
							Plug		Receptacle		Max		
	± 001	Max	Min	+ 063 - 000	Min	Max	Min	Max	Min	Max	Plug	Recpt	
16	0625 (1 59)	127 (3 23)	069 (1 75)	250 (6 35)	096 (2 44)	116 (2 95)	227 (5 77)	307 (7 80)	294 (7 47)	354 (8 99)	281 (7 14)	328 (8 33)	031 Max (0 79)
12	094 (2 39)	190 (4 83)	112 (2 84)	375 (9 53)	130 (3 30)	150 (3 81)	062 (1 57)	132 (3 35)	109 (2 77)	179 (4 55)	375 (9 53)	422 (10 72)	062 Max (1 57)
8	142 (3 61)	310 (7 87)	205 (5 21)	500 (12 70)	243 (6 17)	259 (6 58)	062 (1 57)	132 (3 35)	109 (2 77)	179 (4 55)	375 (9 53)	422 (10 72)	080 Max (2 1)
4	225 (5 72)	441 (11 20)	328 (8 33)	625 (15 88)	370 (9 40)	397 (10 08)	062 (1 57)	132 (3 35)	109 (2 77)	179 (4 55)	375 (9 53)	422 (10 72)	100 (2 54) 010 (25)
0	357 (9 07)	597 (15 16)	464 (11 79)	625 (15 88)	510 (12 95)	550 (13 97)	062 (1 57)	132 (3 35)	109 (2 77)	179 (4 55)	281 (7 41)	328 (8 33)	232 ± (5 89) 010 (25)

1/ Dimension A is measured after plating
2/ These values are used for calculating mechanical spacing between contacts and between contacts and shell
3/ Dimension J represents the distance between the end of the shell and the point at which the mating pin engages socket contact spring
4/ G dimension limited to a maximum of 2/3 of E dimension, applicable to size 16 and 12 only
Cutout is optional for sizes 1 0 4 and 6

NOTES
1 Dimensions are in inches
2 Metric equivalents (to the nearest .01 mm) are given for general information only and are based upon 1 inch = 25 4 mm.
3 Metric equivalents are in parentheses

FIGURE 1. Socket and pin, classes C, I and R

3.4.2 Insert design and construction Inserts shall be positively secured with respect to the shell

3 4 2.1 Classes C, J, and R. Inserts shall be supplied rotated from the normal position, if specified The degree and direction of rotation shall be as specified (see 3 1) Inserts shall be of voidless construction and shall be nonremovable from their shells

3.4.2 2 Class L Inserts shall be supplied rotated from the normal position, if specified The degree of rotation shall be as specified on the MS (see 3 1) The socket inserts shall be of hard faced and limited (closed) entry design Inserts may be removable from their shell. However, pin and socket inserts shall not be interchangeable within a connector The pin insert interface shall be of a resiliant material

3.4.2 3 Insert arrangements Insert arrangement shall be in accordance with MS33681 through MS33691, MS90565, MS90567, MS14054, MS14055, and MS14057 as specified (see 3 1) (insert arrangements utilizing 12S, 14S, and 16S are not applicable)

3.4.2 4 Contact alinement To facilitate self-alinement of mating contacts, inserts for socket contacts shall be designed so that individual contacts will have an overall sideplay of 0 008 minimum

3.4.3 Coupling connections. Plugs shall be connected or coupled to their mating receptacle by means of coupling rings. The coupling threads shall be as specified (see 3 1) All coupling rings shall be knurled or fluted

3 4.3 1 Classes C, J, and R Coupling rings shall be designed so that the pin and socket contacts will fully engage or disengage as the ring is respectively tightened or loosened The coupling ring shall jack against the adapter during connector unmating. Coupling shall occur in the following sequence Polarization and engagement of shells, engagement of coupling threads, engagement of contacts. The uncoupling sequence shall be in the reverse order

3 4 3 2 Class L The coupling of class L connectors shall occur in the following sequence Polarization and engagement of the mating shells, engagement of the ground and neutral contacts, engagement of the phase contacts, and engagement of the coupling threads The uncoupling sequence shall be in reverse order

3 4 4 Polarization Polarization of the plug with its receptacle shall be accomplished by five integral keys on the male connector and matching keyways on the female connector and shall be designed so that it cannot possibly interfere with the functioning of the coupling threads The integral keys and keyways shall render the mating of the plug and receptacle in more than one position impossible The mating keys and keyways shall be substantially rectangular in cross section

3.4 4 1 Class L Class L shells shall be supplied with the main key (or keyway) rotated from the normal position, as specified (see 3 1) The relationship between the four small minor keys (or keyways) and the insert arrangement centerline shall remain constant

3 4 5 Screw threads Coupling threads of connectors, stowage receptacles and protective covers shall be either 1P- 2L-DS or 1428P-.2857L-DS, class 2A or 2B of MIL-STD-1373, as specified (see 3 1). All adapter threads shall conform to Handbook H-28 and shall be as specified (see 3 1) Screw threads shall be checked after plating by means of ring and plug gages only, in accordance with Handbook H-28 Out-of-roundness beyond the tolerances of MIL-S-7742 or MIL-STD-1373 is not objectionable if the threads can be checked without forcing of the thread gages Screw threads may be relieved provided such relief does not interfere with the proper performance of the screw threads

3 4 5.1 Lubrication All class 2B threads shall be coated with a lubricant conforming to MIL-G-23827

3 4 6 Class J connectors Class J connectors shall be provided with a grommet to support individual conductors and shall be held in position by the appropriate cable sealing adapter (style 2)

3 4 7 Class L connectors Class L grounding connectors shall have all system ground contacts electrically connected to their shells without interfering with proper engagement or performance of the connectors All shells and associated hardware of grounding assemblies shall be of the conductive (C) finish, and only key (or keyway) positions 4, 5, or 6 as applicable, shall be used All shells and hardware of nongrounding assemblies shall have a nonconductive (N) finish

3.4.8 Accessories

3 4 8 1 Adapters, cable sealing Adapters shall be as specified in MS17340 through MS17342 and MS90568 through MS90571 The adapters shall not seize the coupling ring and shall be designed for bottoming out when assembled to the connector.

3 4.8.1.1 Classes C, J, and R. Adapters shall be capable of sealing on cable conforming to MIL-C-915 or MIL-C-13777 and shall be provided with a permanently attached protective cover

3 4.8.1.2 Class L. Adapters shall be capable of sealing on cable or wire conforming to MIL-C-3432 or IPCEA Publication No S-19-81 (see 3 1)

3.4 8 2 Protective covers Protective covers shall be assembled to the connector as specified in MS17349, MS17350, MS90563, and MS90564

3 4 8 3 Stowage receptacles. Stowage receptacles shall be as specified in MS18062

3 4 8 4 Cable sealing gland (class L) Cable sealing glands shall be as specified in MS23747

3 4 8 5 Cable grip (class L) The cable grip shall be as specified in MS90561

3 5 Permeability (mu) When the connector assembly less cable grip or accessory is tested as specified in 4 6 2, the relative permeability shall be less than 2 0

3 6 Shell-to-contact resistance (class L, grounding) When connectors are tested in accordance with 4 6 3, the resistance between system ground contacts and the shell shall be not greater than 10 millivolts

3.7 Contact resistance. When connectors are tested as specified in 4 6.4, the resistance of mated pin and socket contacts, shall be such that the potential drop at the test current specified in table I shall be not greater than the values specified

TABLE I Contact resistance

Contact	Test current (amperes)		Potential drop (millivolts, max)	
	Class			
	C, J, and R	L	Initial	After corrosion
16	20	---	25	35
12	35	---	20	30
8	60	---	12	25
6	---	40	8	18
4	100	---	10	20
4	---	60	8	18
1/0	200	---	10	20
1/0	---	100	9	19
2/0	---	150	10	20
4/0	---	200	11	22

3.8 Dielectric withstanding voltage. When connectors are tested as specified in 4 6.5, connectors shall be capable of withstanding the applicable voltages shown in table II without flashover or breakdown

TABLE II Dielectric withstanding voltage

Service rating	Sea level test voltage minimum (Vac rms, 60 Hz)
Inst	1,000
A	2,000
D	2,800
E	3,500
B	4,500
C	7,000

3 9 Thermal shock. When connectors are tested as specified in 4 6 6, connectors and cable sealing adapters shall show no evidence of physical damage.

3.10 Air leakage (class C, J, and L connectors and protective covers) When connectors and protective covers are subjected to the air leakage test of 4 6 7, the air leakage rate shall be not greater than 1 atmospheric cubic inch of air per hour

3 11 Contact retention When contacts are tested as specified in 4 6 8, they shall be capable of withstanding the axial loads shown in table III.

TABLE III. Contact retention loads

Contact size	Axial load (lbs, min)
16	10
12	15
8	20
6	20
4	25
1/0	35
2/0	35
4/0	35

3 12 Insert retention When insert assemblies are tested as specified in 4 6 9, they shall retain their normal position in the connector shell for a minimum of 5 seconds at the pounds force per square inch ($lb_f in^2$) pressure specified in table IV.

TABLE IV. Insert retention test pressures.

Size	Gage pressure (lb_f/in^2)
12	150
14 through 18	100
20 through 22	75
24 through 28	60
32 through 52	45

3.13 Insulation resistance When connectors are tested as specified in 4.6.10, the initial insulation shall be not less than 5,000 megohms.

3 14 Moisture resistance When connectors are tested as specified in 4 6 11, they shall meet the following requirements

Insulation resistance
During the 10th cycle - - - - - - - - - - 10 megohms minimum
After 24-hour drying period - - - - - - 1,000 megohms minimum
Dielectric withstanding voltage - - - - - As specified in table II

3 15 Durability When connectors are tested as specified in 4 6.12, there shall be no evidence of damage Flaking of the plating is considered a failure

3.16 Salt spray (corrosion). When tested as specified in 4 6 13, there shall not be sufficient corrosion to interfere with the mating of the connectors or accessories Exposure to salt-laden atmosphere shall not cause corrosion or exposure of the basic metal on any plated metal part such as shells, adapters, coupling rings or the individual pin and socket contacts submitted which is detrimental to their mechanical or electrical performance

3 17 Cable pull-out When connectors are tested as specified in 4 6 14, test cables (see 4 4.3) shall not pull-out when the loads given in table V are applied, nor shall the slippage exceed 1/8 inch

TABLE V Cable pull-out test loads

Weight of cable per 1,000 ft (pounds)	Min required pull-out force (pounds)	
	Without cable grip	With cable grip
Up to 350	50	75
351 - 725	75	150
726 - 1,000	100	200
Over 1,000	125	250

3 18 Vibration When the wired connector assembly is tested as specified in 4 6 15, there shall be no cracking, breaking, or loosening of parts, nor shall there be a loss of electrical continuity in excess of 10 microseconds

3.19 Drop (class L) When connectors are tested as specified in 4 6 16, there shall be no breaking or cracking of inserts, bending of pins nor any other damage which prevents the connectors from being mated or renders them unfit to continue further testing Any chipping of the inserts which affects its polarization or retention in the shell shall be considered a failure

3 20 High-impact shock When connectors are tested as specified in 4 6 17, there shall be no evidence of damage or discontinuity of current in excess of 10 microseconds The connectors or accessories shall not loosen or become disengaged

3 21 Water immersion When tested in accordance with 4 6 18, the receptacle inserts and panel seals shall show no leakage There shall be no evidence of water leakage at the connector interface of mated connectors nor in the cable adapters of the mated or unmated plugs At the end of 4 hours while the mated plugs are still immersed, the insulation resistance shall be 100 megohms minimum. After removal of unmated connectors from the immersion tank, the insulation resistance shall be 100 megohms minimum.

3 22 Heat rise (class L) When connectors are tested as specified in 4 6 19, the temperature rise of the individual contact terminals shall be not more than 30°C (54°F) above ambient temperature There shall be no evidence of physical damage.

3.23 Arc rupture (class L). When connectors are tested as specified in 4 6.20, they shall withstand the test current in table VI. There shall be no electrical nor mechanical damage which would prevent the connectors from being fully mated and unmated by hand. Flexible spring members of contacts shall not weld together Contacts shall maintain shape, and there shall be no excessive vaporization of metal or contact distortion Following the test, the connectors shall meet the following requirements

Insulation resistance - - - - - - - - 100 megohms minimum
Dielectric withstanding voltage - - - As specified in table II

TABLE VI Test current for arc rupture (class L only)

Contact	Rated current (amperes)	Test current (amperes)
6	40	60
4	60	90
1/0	100	150
2/0	150	225
4/0	200	300

3 24 Fluid immersion When connectors are tested as specified in 4 6 21, they shall mate properly with their counterpart connectors and withstand one-half the applicable voltage stipulated in table II.

3.25 Tensile (protective cover). When the protective covers are tested as specified in 4 6 22, they shall withstand a tensile load of 25 pounds minimum

3 26 Contact engagement and separation forces. When socket contacts are tested as specified in 4 6 23, they shall comply with the contact engagement and separation forces in table VII

TABLE VII Contact engagement and separation forces

Contact size	Force (pounds)	
	maximum	minimum
16 - - - - - - - - - - -	3 0	0 25
12 - - - - - - - - - - -	5 0	0 50
8 - - - - - - - - - - -	10 0	0 75
6 - - - - - - - - - - -	10 0	0 75
4 - - - - - - - - - - -	15 0	1 00
1/0 - - - - - - - - - - -	20 0	2 00
2/0 - - - - - - - - - - -	20 0	2 00
4/0 - - - - - - - - - - -	20 0	2 00

3 27 Probe damage (contacts) When size 16 sockets are tested as specified in 4 6 24, the contact engagement and separation forces shall be 3 0 maximum and 0.25 minimum

3 28 Abrasion

3 28 1 Nonconductive finish Those areas of the test panel which have been subjected to the test specified in 4 6 25 1 shall not show basis metal exposure and shall be dielectric to the extent that 1/16-inch diameter ball contacts, pressed with a 50-gram load against a flat section, shall not pass current with the application of a 6 volt potential Following the test, salt spray (corrosion) shall meet the requirements of 3.16

3 28 2 Conductive finish. Those areas of the test panel which have been subjected to the test specified in 4 6.25 2 shall not show basis metal exposure Following the test, salt spray (corrosion) shall meet the requirements of 3 16.

3 29 Marking Each connector, adapter, protective cover and stowage receptacle shall be legibly and permanently marked on the shell, body, or coupling ring in accordance with MIL-STD-1285 The covers shall be marked with the MS part number when procured as a separate item. In addition, class L connectors shall be marked with the voltage, phase, number of wires, frequency, and current rating with location optional, in accordance with Occupational Safety and Health Act (OSHA)
Example 120/240V-1(Ø or PH)-3W-60H_z-60A

3.29 1 Marking of inserts Inserts shall be marked as specified (see 3 1)

3 29 2 Contact designations Contacts shall be as specified (see 3 1) Letters shall remain legible upon completion of all tests specified under 4 4.2 Letters shall be either raised or flush and shall be arranged to avoid confusion between contacts All letters shall appear on the front of each insert and as many as practicable on the rear face Lettering of socket inserts shall correspond with that of the mating pin insert.

3 29 3 Marking of contacts (class L) Marking of contacts for class L connectors shall consist of two color bands as specified in table VIII The location of the color bands shall be in accordance with the applicable military standard (see 3 1)

TABLE VIII Color coding for pins, sockets, and wire barrels

Contact size	Wire barrel size	Color band for contact size	Color band for wire barrel size
4/0	4/0	Yellow	Yellow
2/0	2/0	Orange	Orange
1/0	1	Blue	Black
4	4	Yellow	Yellow
6	6	Blue	Blue

3 30 Workmanship Connectors, adapters, protective covers, and stowage receptacles shall be processed in such a manner as to be uniform in quality and shall be free from defects that will affect life, serviceability, or appearance There shall be no evidence of poor molding or fabricating, damaged or improperly assembled contacts, peeling or chipping of the plating and finish, excessive flash which would indicate improper molding, nicks and burrs to metal surfaces

3 31 Part number changes Changes in manufacturer's part numbers shall be governed by the drawing number requirement of MIL-D-1000.

4 QUALITY ASSURANCE PROVISIONS

4 1 Responsibility for inspection Unless otherwise specified in the contract or purchase order, the supplier is responsible for the performance of all inspection requirements as specified herein Except as otherwise specified in the contract or order, the supplier may use his own or any other facilities suitable for the performance of the inspection requirements specified herein, unless disapproved by the Government The Government reserves the right to perform any of the inspections set forth in the specification where such inspections are deemed necessary to assure supplies and services conform to prescribed requirements

4 1.1 Test equipment and inspection facilities Test and measuring equipment and inspection facilities of sufficient accuracy, quality and quantity to permit performance of the required inspection shall be established and maintained by the supplier The establishment and maintenance of a calibration system to control the accuracy of the measuring and test equipment shall be in accordance with MIL-C-45662

4.2 Classification of inspections. The inspections specified herein are classified as follows:

(a) Qualification inspection (see 4 4)
(b) Quality conformance inspection (see 4.5).

4.3 Inspection conditions. Unless otherwise specified, inspections required by this specification shall be made under any combination of conditions within the following ranges. Any specified condition shall not affect the other two ambient ranges

Temperature 15°C to 35°C.
Relative humidity - 30 to 80 percent
Barometric pressure - 650 to 850 mm of mercury

4 4 Qualification inspection. Qualification inspection shall be performed at a laboratory acceptable to the Government (see 6 4) on sample units produced with equipment and procedures normally used in production

4 4 1 Qualification samples Qualification inspection samples shall consist of the following.

(a) Two complete mating assemblies of straight plug and wall mounting receptacle, in each size of either class C or class R, having either the nonconductive (N) finish or conductive (C) finish, and containing the greatest complement of contacts for that size If class R assemblies are provided and additional qualification is desired for class C and (or) class J connectors, then one additional mating assembly of straight plug and wall mounting receptacle in each size of either class C or class J containing the greatest complement of contacts for that size shall be provided. Suitable adapters less protective covers shall also be provided
(b) For class L, two complete mating assemblies of wall mounting receptacle (MS90555) and straight plugs (MS90556) and one complete mating assembly of a cable connecting plug without coupling ring (MS90557) and a wall mounting receptacle with coupling ring (MS90558) having the finish for which qualification is desired, and containing the greatest complement of contacts for that size Three complete mating assemblies of MS90555 and MS90556 if qualification of MS90557 and MS90558 is not desired or three complete mating assemblies of MS90557 and MS90558 if qualification of MS90555 and MS90556 is not desired. Protective covers shall be provided for connectors subjected to the drop test
(c) Connectors or accessories being qualified on the basis of differences from those initially qualified (see 4 4 1 1).
(d) Fifty-five socket contacts and five pin contacts of each size.
(e) Two panels 4 x 4 x 1/8 inch of AMS4027 aluminum (AA-6061-T6) finished with a conductive coating, representing normal piece part treatment as specified in 3 3 7 1 1 or finished with a nonconductive hard oxide coating representing normal piece part treatment as specified in 3 3 7.1.2 or one of each finish Only one type panel of the appropriate finish, if qualification is desired for only one finish
(f) Two protective covers with mating connectors in sizes 12, 22, and 40, or two each of the shell sizes for which qualification is desired
(g) One stowage receptacle with mating connector in sizes 12, 22, and 40, or two each of the shell sizes for which qualification is desired
(h) One complete adapter assembly in each size and style other than that used in 4 4 1(a) shall be submitted for evidence of manufacture at the discretion of the Government qualifying activity

TABLE IX Qualification and group B inspection.

Examination or test	Requirement paragraph	Test paragraph	Connector assemblies	Cable adapters	Protective covers	Stowage receptacles	Separate contacts	Test panels
Group 1								
Visual and mechanical examination	3.1, 3.3.1 to 3.3.9 incl, 3.4.1 to 3.4.8 incl, 3.29 and 3.30	4.6.1	X	X				
Permeability	3.5	4.6.2	X	X				
Shell-to-contact resistance (class L, grounded)	3.6	4.6.3	X					
Contact retention (class L)	3.11	4.6.8	X					
Contact resistance	3.7	4.6.4	X					
Dielectric withstanding voltage	3.8	4.6.5	X					
Thermal shock	3.9	4.6.6	X	X				
Air leakage	3.10	4.6.7	X					
Contact retention (classes C, J, R)	3.11	4.6.8	X					
Insert retention	3.12	4.6.9	X					
Insulation resistance	3.13	4.6.10	X					
Moisture resistance	3.14	4.6.11	X	X				
Insulation resistance	3.14	4.6.10	X	X				
Dielectric withstanding voltage	3.8	4.6.5	X	X				
Durability	3.15	4.6.12	X					
Salt spray (corrosion)	3.16	4.6.13	X	X				
Contact resistance	3.7	4.6.4	X					
Cable pull-out	3.17	4.6.14	X	X				
Group 2								
Visual and mechanical examination	3.1, 3.3.1 to 3.3.9 incl, 3.4.1 to 3.4.8 incl, 3.29 and 3.30	4.6.1	X	X				
Vibration	3.18	4.6.15	X	X				
Drop (class L) 1/	3.19	4.6.16	X					
Dielectric withstanding voltage	3.8	4.6.5	X					
High-impact shock 1/	3.20	4.6.17	X	X				

See notes at end of table

TABLE IX Qualification and group B inspection - Continued

Examination or test	Requirement paragraph	Test paragraph	Connector assemblies	Cable adapters	Protective covers	Stowage receptacles	Separate contacts	Test panels
Group 2 - Continued								
Water immersion	3.21	4.6 18	X	X				
Insulation resistance	3.21	4 6 10	X	X				
Heat rise (class L) 1/	3.22	4.6 19	X					
Arc rupture (class L) 1/	3.23	4.6.20	X					
Dielectric withstanding voltage	3.8	4.6 5	X					
Insulation resistance	3.23	4.6.10	X					
Fluid immersion	3.24	4.6 21	X	X				
Dielectric withstanding voltage	3 8	4.6 5	X	X				
Group 3								
Visual and mechanical examination	3.1, 3.3.1 to 3 3 9 incl, 3 4 1 to 3.4.8 incl, 3.29 and 3.30	4.6.1			X	X		
Permeability	3.5	4 6 2			X	X		
Water immersion	3 21	4 6.18			X	X		
Insulation resistance	3.21	4 6 10			X	X		
Salt spray (corrosion)	3 16	4 6 13			X	X		
Tensile	3 25	4 6 22			X			
Air leakage	3 10	4 6 7			X			
Group 4								
Contact engagement and separation forces	3 26	4 6 23					X	
Probe damage (contacts size 16 only)	3.27	4.6 24					X	
Contact engagement and separation forces (size 16 only)	3.26	4.6 23					X	
Salt spray (corrosion)	3 16	4 6 13					X	
Contact resistance	3 7	4.6 4					X	
Group 5								
Abrasion	3.28	4 6.25						X
Salt spray (corrosion)	3 16	4 6 13						X

NOTE Tests indicated with an "X" are required

1/ Qualification only

4.4.1.1 Qualification of additional connectors or accessories. For connectors or accessories which differ only in detail from those submitted for qualification, the manufacturer's test report need only provide inspection and test data necessary to validate the differences, with information on identical features for which no inspection or test was performed. Qualification for ungrounded assemblies may be granted by similarity if both type panels are used in qualification for grounded assemblies Connectors of a less dense configuration than those listed on the qualified products list may be qualified by similarity provided samples are furnished to the qualifying activity.

4.4.1.2 Qualification of adapters, protective covers, and stowage receptacles Manufacturers of adapters, protective covers, stowage receptacles or manufacturers who are not producing mating connectors to this specification shall submit data substantiating that qualification inspection of those items was performed with an appropriate number of approved electrical connectors as specified in 4 4.1, and in accordance with the applicable requirements of this specification, and in the order shown in table IX.

4 4.2 Inspection routine Qualification inspection of connectors, adapters, protective covers, and stowage receptacles shall consist of all the tests of this specification described under test methods of 4.6. The test program shall be as follows and in the order shown in table IX.

(a) Mated connectors shall be subjected to the applicable tests listed in table IX. Connectors for group 1 need not be wired unless otherwise specified by the individual test method paragraph Connectors for group 2 shall be wired and sealed Samples required are as follows

(1) Class C and R
Group 1 - One pair (either class)
Group 2 - One pair (same class as selected for group 1)

(2) Class L
Group 1 - One pair of MS90555 or MS90556, or as applicable (see 4 4.1(b))
Group 2 - One pair of each of the following, or as applicable (see 4 4 1(b))

a. MS90555 and MS90556

b MS90557 and MS90558

(b) One pair of each of the mated connector assemblies as described in 4 4 1(a) shall be subjected to the thermal shock test of 4 6 6 and the air leakage test of 4 6 7

(c) Fifty-five socket contacts and five pin contacts of each size selected as described in 4 4 1(d), shall be subjected to the applicable tests listed in group 4 of table IX, as follows

(1) Fifty sockets shall be subjected to the test of 4 6 23 Following this test, the size 16 socket contacts shall be subjected to the test of 4 6 24 followed by a retest of 4.6 23.

(2) Remaining five pins and sockets shall be subjected to the tests of 4 6 13 and 4 6 4

(d) One or two panels, as applicable, selected as described in 4 4 1(e), shall be subjected to the applicable tests listed in group 5 of table IX

(e) Protective covers and stowage receptacles, selected as described in 4 4 1(f) and 4 4 1(g), shall be subjected to the applicable tests in group 3 of table IX

4 4 3 Test cables. For the purposes of the tests and where applicable, classes C, J, and R connectors shall be wired with cable conforming to MIL-C-915 or MIL-C-13777 of construction to match the insert arrangement of the connector, as far as possible. Where required, suitable adapters shall be attached to the connectors to provide effective sealing around such cable. Solid resilient plugs may be used in lieu of test cables for sealing purposes for group B inspection Class L receptacles shall be wired with single conductors that are within the limits specified on MS90555 and MS90558 Class L plugs shall be wired with cable conforming to MIL-C-3432 or IPCEA Publication No S-19-81 as defined on the applicable insert arrangement standard.

4 4 4 Failures One or more failures shall be cause for refusal to grant qualification approval

4.4 5 Retention of qualification. To retain qualification, the supplier shall forward a report at 24-month intervals to the qualifying activity. The qualifying activity shall establish the initial reporting date. The report shall consist of

(a) A summary of the results of the test performed for inspection of product for delivery, group A, indicating as a minimum the number of lots that have passed and the number that have failed. The results of tests of all reworked lots shall be identified and accounted for.
(b) A summary of the results of tests performed for qualification verification inspection, group B, including the number and mode of failures The summary shall include results of all qualification verification inspection tests performed and completed during the 24-month period If the summary of the test results indicates nonconformance with specification requirements, and corrective action acceptable to the qualifying activity has not been taken, action may be taken to remove the failing product from the qualified products list. If the summary of test results indicates conformance with the specification requirements for two successive 24-month periods, the next summary of test results shall be submitted in 36 months.

Failure to submit the report within 30 days after the end of each 24- or 36-month period may result in loss of qualification for the product In addition to the periodic submission of inspection data, the supplier shall immediately notify the qualifying activity at any time during the 24- or 36-month period that the inspection data indicates failure of the qualified product to meet the requirements of this specification

In the event that no production occurred during the reporting period, a report shall be submitted certifying that the company still has the capabilities and facilities necessary to produce the item If during 2 consecutive reporting periods there has been no production, the manufacturer may be required, at the discretion of the qualifying activity, to submit a representative product of each type, grade, class, etc to testing in accordance with the qualification inspection requirements

4.5 Quality conformance inspection

4 5 1 Inspection of product for delivery. Inspection of product for delivery shall consist of group A inspection

4 5 1 1 Inspection lot An inspection lot shall consist of all connectors covered by a single MS, produced under essentially the same conditions, and offered for inspection at one time

4 5 1 2 Group A inspection Group A inspection shall consist of the visual and mechanical examination

4 5.1.2.1 Sampling plan. Statistical sampling and inspection shall be in accordance with MIL-STD-105 for general inspection level II The acceptable quality level (AQL) shall be 1.0 percent and 4.0 percent for major and minor defects, respectively Major and minor defects shall be as defined in MIL-STD-105

4 5 1 2 2 Rejected lots If an inspection lot is rejected, the supplier may rework it to correct the defects, or screen out the defective units, and resubmit for reinspection Resubmitted lots shall be inspected using tightened inspection Such lots shall be separate from new lots, and shall be clearly identified as reinspected lots.

4 5.2 Qualification verification inspection. Qualification verification inspection shall consist of group B inspection Except where the results of this inspection shows noncompliance with the applicable requirements (see 4 5 2 1 5), delivery of products which have passed group A inspection shall not be delayed pending the results of this qualification verification inspection.

4 5 2 1 Group B inspection Group B inspection shall consist of the examinations and tests specified in table IX, in the order shown. Group B inspection shall be made on sample units selected from inspection lots which have passed group A inspection. The group B inspection shall consist of a complete requalification (see 4 5.2) every 24 months. After a manufacturer passes group B inspection two successive times, the group B inspection shall be repeated in 36 months.

4 5 2 1 1 Group B inspection of adapters, protective covers and stowage receptacles Manufacturers of adapters, protective covers and stowage receptacles or manufacturers who are not producing mating connectors shall submit data substantiating that group B tests of those items were performed with an appropriate number of approved electrical connectors as specified in 4 4 2, and in accordance with the applicable requirements of this specification and in the order shown in table IX

4 5 2 1 2 Sampling plan The sample and inspection routine shall be the same as that submitted for qualification inspection (see 4.4 1 and 4 4.2), except for classes C, J, and R, connectors for group B testing, six complete mating assemblies of straight plugs and wall mounting receptacles each, in shell sizes 12, 22, and 40 of either class C or class R, having either the nonconductive (N) finish or conductive (C) finish, containing the greatest complement of contacts for that size Suitable adapters less protective covers shall also be provided One-half of the class C or class R samples shall be subjected to the tests of group 1 of table IX and the remaining one-half shall be subjected to the tests of group 2 of table IX

4 5 2 1 3 Failures If one or more sample units fail to pass group B inspection, the sample shall be considered to have failed

4 5 2 1 4 Disposition of sample units Sample units which have been subjected to group B inspection shall not be delivered on the contract or purchase order

4 5 2 1 5 Noncompliance If a sample fails to pass group B inspection, the supplier shall take corrective action on the materials or processes, or both, as warranted, and on all units of product which can be corrected and which were manufactured under essentially the same conditions, with essentially the same materials, processes, etc, and which are considered subject to the same failure Acceptance of the product shall be discontinued until corrective action, acceptable to the Government, has been taken. After the corrective action has been taken, group B inspection shall be repeated on additional sample units (all inspection, or the inspection which the original sample failed, at the option of the Government) Group A inspection may be reinstituted, however, final acceptance shall be withheld until the group B reinspection has shown that the corrective action was successful In the event of failure after reinspection, information concerning the failure and corrective action taken shall be furnished to the cognizant inspection activity and the qualifying activity

4 5 3 Inspection of preparation for delivery Sample packages and packs and the inspection of the preservation-packaging, packing and marking for shipment and storage shall be in accordance with the requirements of MIL-C-55330

4 5 4 Assembly plants Assembly plants must be listed on or approved for listing on the applicable qualified products list The qualified connector manufacturer shall certify that the assembly plant is approved for the distribution of the manufacturer's parts The assembly plant shall use only piece parts supplied by the qualified connector manufacturer No testing other than visual examination is required of certified piece parts obtained from the qualified connector manufacturer, except when there is

cause for rejection. All assemblies produced at the assembly plant shall be subjected to examination of product to assure that the assembly process conforms with that established at the qualified manufacturing plant Quality control requirements, including Government inspection surveillance, shall be the same as required for the qualified connector manufacturer

4 6 Methods of examination and test

4.6.1 Visual and mechanical examination Connectors, adapters, protective covers, and stowage receptacles shall be examined to verify that the material, design, construction, physical dimensions, marking, and workmanship are in accordance with the applicable requirements (See 3 1, 3 3 1 to 3 3 9 inclusive, and 3 4 1 to 3 4.8 inclusive, 3 29 and 3.30)

4 6 2 Permeability (see 3.5). Permeability of the connectors shall be measured with an instrument conforming to MIL-I-17214

4 6 3 Shell-to-contact resistance (class L, grounded) (see 3 6) The electrical resistance between system ground contacts and the shell shall be determined by measuring the potential drop from each system ground contact to the shell when carrying a current of 1 ±0.1 amperes dc Using the voltmeter-ammeter method, the potential drop shall be measured at the extreme terminal end of the system ground pin or socket and the front of the shell (plug or receptacle).

4 6 4 Contact resistance (see 3 7) Each pair of mated pin and socket contacts shall be tested after only one mating of the contacts, in accordance with method 3004 of MIL-STD-1344 The following details and exceptions shall apply

(a) Wire size and type - See 4 4.3.
(b) Test current - See table I
(c) Test sample preparation - In addition to preparation in method 3004 the unassembled contacts shall be mated to the minimum depth as determined when the contacts are installed in the appropriate connectors The potential drop shall be measured at the extreme terminal ends of the contacts See figure 2 for wiring diagram
(d) Millivolt drop requirements - See table I.

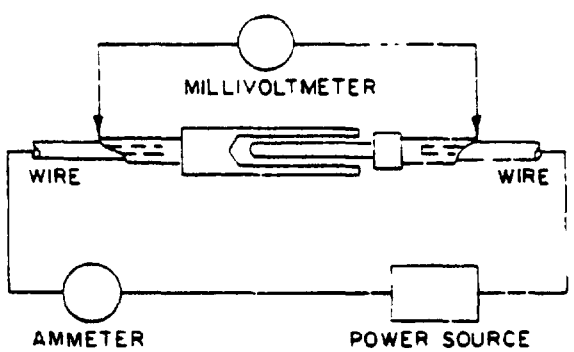

FIGURE 2 Wiring diagram for contact resistance test

4 6 5 Dielectric withstanding voltage (see 3 8) Unmated connectors shall be tested in accordance with method 3001 of MIL-STD-1344 The following details and exceptions shall apply

(a) Magnitude of test voltage - See table II
(b) Nature of potential - ac
(c) Points of application of test voltage - Between the two closest contacts and between the shell and the contacts closest to the shell Voltage shall not be applied between system ground contacts or system ground contacts and shells of any grounding, class L connectors
(d) Application of test voltage - The test voltages shall be applied gradually at the rate of approximately 500 volts per second until the specified voltage is reached

4.6.6 Thermal shock (see 3 9) Unmated connectors shall be tested in accordance with method 1003, test condition B, of MIL-STD-1344, except that the low temperature shall be -55° $^{+0}_{-3°}$C.

4 6 7 Air leakage (see 3 10)

4.6 7.1 Classes C and J connectors After a minimum of 30 minutes at -55° ±3°C, classes C and J receptacles shall be subjected to 30 (lb_f/in^2) differential applied alternately to each insert face The leakage rate shall be measured

4 6 7 2 Class L connectors Class L receptacles shall be mounted to a suitable fixture using the normal mounting method and panel seal. Both class L plugs and receptacles shall be subjected to a pressure differential of 30 lb_f/in^2 with the pressure applied alternately to each insert face The leakage rate around the panel seal and through the insert shall be measured

4 6 7 3 Protective covers The protective covers shall be mated to a connector having either the contacts or inserts removed and a pressure of 15 lb_f/in^2 shall be applied to the inner side of the protective cover The leakage rate shall be measured

4 6 8 Contact retention (see 3 11) Individual contacts shall be subjected to the axial loads specified in table III The load shall be applied, first in one direction, then the other, on individual contacts with all other contacts in place and the insert in the shell, uniformly at a rate of approximately 1 pound per second

4 6 9 Insert retention (see 3 12) Inserts shall be subjected to the axial load specified in table IV, first in one direction, then the other Loading shall be accomplished by applying air pressure alternately to each fact of the insert The pressure shall be increased gradually at a rate of approximately 10 lb_f/in^2 per second until the specified pressure in table IV is reached

4 6 10 Insulation resistance (see 3 13) Mated connectors shall be tested as specified in method 3003 of MIL-STD-1344 The following detail and exception shall apply

(a) Points of application of test voltage - Between all adjacent pairs of contacts, but not more than six pair, and between the shell and all adjacent contacts, but not more than six
(b) No measurements shall be made between system ground contacts or between system ground contacts and shell of any grounding class L connector

4 6 11 Moisture resistance (see 3.14). All cable mounted connectors shall be completely wired and assembled with appropriate accessories in accordance with the directions of the manufacturer Cable used shall be as specified (see 4 4 3) Class L receptacles shall be wired with suitable single conductor wire The mated connectors shall be subjected to 10 cycles of exposure in accordance with method 106 of MIL-STD-202, with the exceptions and details listed below

(a) Connectors shall be mounted in a horizontal position with the wires or cables descending into the backshells There shall be no drip loops in the wires or cables
(b) Wires and cables shall be brought out of the chamber through vapor-tight seals or the ends of the cables or wires effectively sealed
(c) There shall be no wire splices in the chamber.
(d) Delete steps 7a and 7b
(e) During steps 1 to 6 inclusive, a polarizing potential of 100 volts dc shall be applied between alternate contacts connected together electrically and the remaining contacts and shell connected together electrically The polarity of the voltage applied to the shell shall be negative Voltage shall not be applied to the system ground contacts of class L grounding connectors

(f) After a minimum of 3 hours of step 7 of the tenth cycle, while at the high humidity condition, the connectors shall be subjected to the insulation resistance test of 4 6.10.

(g) Following these measurements, the connectors shall be maintained at test conditions of 4.3 for 24 hours maximum. At the conclusion of this recovery period, insulation resistance and dielectric withstanding voltage shall be tested as specified in 4 6 10 and 4.6.5, respectively

4 6 12 Durability (see 3 15) The complete connector, less coupling ring, shall be mated and unmated 500 times at a rate not exceeding 100 cycles per hour Mating and unmating shall be accomplished in a manner similar to that to which the connector will be subjected in service

4.6.13 Salt spray (corrosion) (see 3 16) Unmated connectors, covers, adapters, stowage receptacles, panels and five pairs of individual unmated pins and sockets of each size shall be tested in accordance with method 1001 of MIL-STD-1344. The following details and exceptions shall apply:

(a) Test condition letter - B

(b) Immediately after exposure, the exterior surfaces shall be washed with tap water and the connectors dried for a maximum of 12 hours in a circulating air oven at a temperature of 100° ±5°F.

4 6 14 Cable pull-out (see 3.17) Cables assembled in the connector adapter, but with the conductors not attached to the contacts, shall be subjected to the axial tensile load pull-out force specified in table V The amount of slippage shall be measured between the cable and the connector adapter The specified load shall be applied for a minimum of 1 hour When cable grips are an integral part of the adapter or connector assembly, they shall be used

4 6 15 Vibration (see 3 18) Connectors with suitable adapters shall be tested in accordance with method 2005 of MIL-STD-1344 The following details and exceptions shall apply

(a) Test condition number - III

(b) Counter part plugs shall be engaged with the mounted receptacles and held by normal locking means only No safety wire shall be used

(c) The vibration of the receptacle and fixture shall be monitored by a suitable sensor at a point on the fixture near a receptacle support point or on the receptacle itself

(d) All contacts shall be wired in a series circuit with at least 100 milliamperes of current flowing through the series circuit during vibration

(e) The cable or wire bundle shall be clamped to nonvibrating points at least 8 inches from the rear of the connectors The clamping length may be selected or changed to avoid resonance of the cable or wire

(f) The system ground contacts of class L grounding connectors shall not be wired into the series monitoring circuit

4 6 16 Drop (class L) (see 3 19) (qualification only) Cabled, unmated line connectors (MS90556 and MS90557) with protective covers assembled shall be tested Cables shall be inserted through an 84 inch +2 inch -0 inch length of standard commercial conduit or similar tube of sufficient diameter to freely accommodate the cable and shall be taped to the conduit so the connector cable grip is 2 inches +2 inch -0 inch from the end of the conduit The other end of the conduit with the cable extending, shall be pivoted at a point 24 inch +1 inch -0 inch above the horizontal surface of solid, adequately aged concrete The pivot shall be capable of rotating 360° and shall not impede or retard the connector's free fall to the striking surface The connector shall be raised by the cap retention lanyard to a point so that the base of the connector (gland nut) is 72 inches +6, -0 above the striking surface and allowed to free fall to the striking surface The connector shall be dropped 10 times, rotating the connector after each free fall, so that the connector strikes the concrete in each of 10 different radial positions approximately 36° apart The cable shall then be removed from the conduit and the shells and inserts examined (see figure 3)

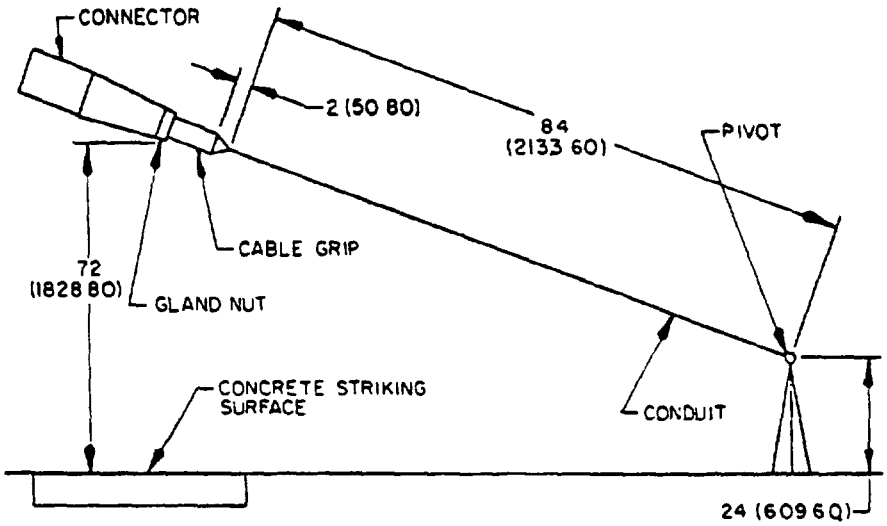

NOTES:
1. Dimensions are in inches.
2. Metric equivalents (to the nearest .01 mm) are given for general information only and are based upon 1 inch = 25.4 mm.
3. Metric equivalents are in parentheses.

FIGURE 3. Typical fixture for drop test

4 6 17 High-impact shock (see 3.20) Complete mated connectors with suitable adapters shall be tested in accordance with method 207 of MIL-STD-202 The following details and exceptions shall apply

(a) Mounting fixtures - In accordance with figure 207-4B, MIL-STD-202
(b) Electrical load and operating conditions - All contacts shall be wired in a series circuit with at least 100 milliamperes of current flowing through the series circuit during high-impact shock.
(c) Monitoring during test - A suitable device shall be used to monitor the current flow and indicate any discontinuity which exceeds 10 microseconds interruption of current flow The system ground contacts of class L grounding connectors shall not be wired into the series monitoring circuit
(d) The mated connectors shall be held together only by the normal locking device Cable or wires shall be supported on a stationary frame not closer than 12 inches from the connector assembly

4 6 18 Water immersion (mated and unmated) (see 3 21) All connectors shall be completely wired and assembled with appropriate accessories in accordance with the directions on the manufacturer's instruction sheet Cable and single conductors used shall be in accordance with 4 4 3 Connectors assembled to multiconductor cables shall be tested in a chamber under pressure by submerging in conductive water Receptacles assembled to single conductor wires shall be mounted to the pressure chamber by their normal mounting means with mounting flange gaskets, and their terminal ends external to the chamber containing the conductive water The water conductivity shall be assured by the addition of at least 5 percent sodium chloride by weight The cable ends shall be sealed or extended outside the chamber The tests shall be performed after each of the following conditionings for the classes specified

(a) As received (all classes).
(b) After a minimum of 4 hours at -55° $^{+0°}_{-3°}$C and return to room temperature (classes C and J only)
(c) After a minimum of 4 hours at 80° $^{+3°}_{-0°}$C and return to room temperature (all classes)

4 6.18.1 Mated (all classes) The chamber shall be at a 1 standard atmosphere (atm) pressure differential for four hours minimum While the samples are still submerged and after the chamber has returned to normal pressure, insulation resistance shall be measured as specified in 4 6 10

4 6 18.2 Unmated (class C and J) The chamber shall be at a 1 atmosphere pressure differential for a minimum of four hours. After the test samples have been removed from the water, salt deposits may be removed by a gentle wash or dip in running water not warmer than 100°F (37 8°C) Following this, all excess moisture shall be removed and the samples dried with compressed air for 5 minutes The insulation resistance shall then be measured as specified in 4 6.10.

4.6 18 3 Unmated (class L) Connectors shall be tested as specified in 4 6 18 2, except the chamber shall be at a pressure differential equivalent to 6 feet of water for 4 hours minimum.

4 6 19 Heat rise (class L) (see 3 22) The test shall be performed at 25°C ±5°C in still air, on mated pairs of connectors with the contacts assembled in the connectors The contacts shall be wired using suitable stranded copper wire of the same AWG rating as the contacts All phase and neutral contacts shall be connected in series. All jumpers are to be at least 2 feet long Thermocouples shall be used to monitor the temperature of the contact terminals. Rated dc current shall be applied through the contacts for a minimum of 4 hours The temperature of each terminal shall be measured after the 4 hours of loading

4 6.20 Arc rupture, class L (see 3.23). Connectors, less coupling ring, shall be subjected to 50 continuous cycles of insertion and withdrawals while carrying the test currents specified in table VI

(a) Insertion and withdrawal cycle.

(1) One mating half of the connector pair shall be firmly mounted The remaining half shall be mounted on a reciprocating (cycling) mechanism and axially alined with the firmly mounted half

(2) The cycling mechanism shall mate the receptacle and plug to their normal mating depth At the initiation of testing and each subsequent cycle, the connector pair shall be mated, and remain mated for 5 seconds minimum The connector pair shall then be separated at a rate of 10 ±1 inches per second. After separation, the connectors shall be remated at the same speed One mating and unmating sequence is considered one cycle The mating and unmating cycle shall be conducted at a rate not to exceed six complete cycles per minute.

(b) Electrical load

(1) The sockets shall be connected to a 400 Hertz source and the pins to an electrical load

(2) The voltage shall be applied between neutral contact and the phase contact closest to the neutral contact. When no neutral contact is available, test between two phase contacts

(3) A steady state inductive load equal to 150 percent of rated current as specified in table VI, at a power factor between 0.75 and 0 80, and at a minimum of 208 volts root mean square (rms), shall be applied using the circuit shown in figure 4 A shunt resistance, in parallel with the inductance, is permissible provided the current through the resistor does not exceed 1 percent of the total load current The inductance shall not alter the waveform of the power supply Following the test, dielectric withstanding voltage and insulation resistance shall be tested as specified in 4 6 5 and 4 6 10, respectively

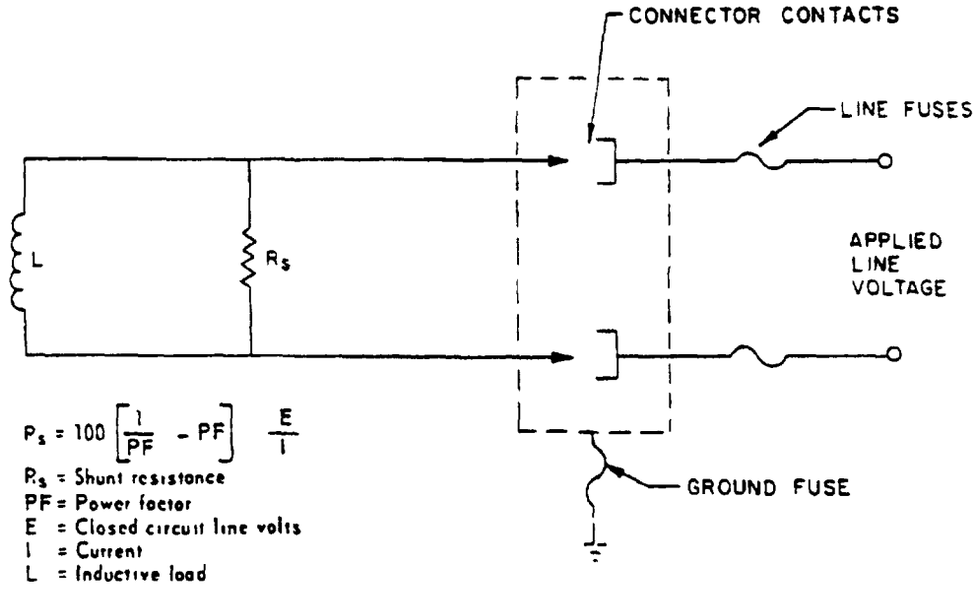

FIGURE 4 Typical circuit for arc rupture.

4 6.21 Fluid immersion (see 3.24). Unmated connectors shall be immersed fully in the fluids specified in table X for 20 hours minimum One mating pair of connectors of each class shall be immersed in each fluid. Upon removal from the fluid, connectors shall be maintained in free air at room temperature for 1 hour maximum Dielectric withstanding voltage shall then be tested as specified in 4 6 5, except the magnitude of test voltage shall meet the requirements of 3.24.

TABLE X Fluids for fluid immersion

Fluids	Specification
Aviation hydraulic fluid (petroleum base) Aircraft lubricating oil	MIL-H-5606 MIL-L-23699

4 6 22 Tensile (protective cover) (see 3.25) Each protective cover shall be securely held and a tensile static load of 25 pounds minimum shall be applied to the end of the chain for at least 5 minutes in each direction as follows

(a) With the axis of the chain at right angles to the axis of the holding rivet
(b) With the axis of the chain in the same axis as that of the rivet

4 6 23 Contact engagement and separation forces (see 3 26). Sockets shall be mounted in a suitable position or fixture for applying gradually increasing loads for the engagement and separation of test pins Half of the quantity of socket contacts used in this test shall be installed in inserts and the remaining socket contacts shall be out of inserts Depth of engagement shall conform to that encountered in service The test pins shall be in accordance with MS3197, except for contact size 2/0 whose diameters shall be a minimum of 4050 + 0001 -.0000 inch and a maximum of 4070 + 0000 - 0001 inch. The minimum diameter test pin shall be inserted and removed from the socket and the separation force measured during removal The maximum diameter test pin shall be inserted and removed from the socket and the engagement force measured during insertion.

4.6 24 Probe damage (contacts, size 16) (see 3.27) Contacts shall be tested as specified in method 2006 of MIL-STD-1344 with the following details and exceptions

(a) A steel test probe of nominal pin contact diameter with a spherical tip shall be inserted into each socket to 1/2-inch, 3/8-inch, and 1/4-inch depths, measured from the face of the inserts
(b) A bending moment of 2 inch-pounds ±10 percent shall be applied about the inserted end and the insert assembly shall be slowly rotated in one direction through 360 degrees.
(c) This test shall be applied with the socket contacts in their inserts and the sockets locked, if necessary, to prevent rotation in the inserts
(d) The diameter of the handle (.190) is not applicable.

4 6 25 Abrasion (see 3.28)

4.6 25 1 Nonconductive finish (see 3.28.1). Panels specified in 4.4 1(e) which have been processed with aluminum connector parts, shall be subjected to 50,000 cycles on the TABER abraser, or equivalent. Wheels used on the TABER abraser, or equivalent, shall be CS-17 with a 1000-gram load on each wheel. Wheels are to be redressed after every 10,000 cycles Following the abrasion test, salt spray (corrosion) shall be tested as specified in 4 6 13.

4.6.25 2 Conductive finish (see 3.28.2). Panels specified in 4.4 1(e) which have been processed with aluminum connector parts shall be subjected to 5,000 cycles on the TABER abraser or equivalent Wheels used on the TABER abraser or equivalent shall be CS-17 with 1,000-gram load on each wheel

5. PREPARATION FOR DELIVERY

5 1 Preparation for delivery shall be in accordance with MIL-C-55330

6. NOTES

6 1 Intended use The various types and classes of connectors are intended for use as follows

(a) Class L connectors are intended for heavy duty, waterproof, high current applications where the connectors may inadvertently be separated with full load applied.
(b) Class R connectors are intended for general, heavy duty, waterproof use where the connectors will be subjected to high humidity, high impact shock, and rapid changes in temperature.

6 1 1 Use of alternate insert positions When connectors of the same size and arrangement are installed sufficiently adjacent to one another to provide a danger of mating plug with the wrong receptacle, it is intended that alternate insert positions should be employed Alternate insert positions are also used in the class L connectors to differentiate between the various power frequencies being used

6 1 2 Wire sizes to be used with contacts Except for some special class L contacts, it is intended that the wire attached to each connector contact should be of the AWG size (or smaller diameter) corresponding to the contact size number. For example, it is intended that an AWG size 12 wire be soldered to at least a size 12 contact, an AWG size 6 wire should be soldered to a size 4 or size 6 contact

6 2 Ordering data. Procurement documents should specify the following

(a) Title, number, and date of this specification.
(b) Applicable MS part number

6 3 Definitions See MIL-STD-1353 and the following

6.3.1 Arc quench type connector This type of connector is designed as a circuit breaking connector with special provisions to minimize damage to cable or connector and reduce the hazard to personnel during circuit rupture under the worst field conditions of high humidity and standing in mud or water. Specifically, any arc drawn while mating or unmating connectors under maximum electrical load will be extinguished before the pin contact leaves the socket contact insert chamber

6 4 Qualification. With respect to products requiring qualification, awards will be made only for such products as have, prior to the time set for opening of bids, been tested and approved for inclusion in the qualified products list, whether or not such products have actually been so listed by that date. The attention of the suppliers is called to this requirement, and manufacturers are urged to arrange to have the products that they propose to offer to the Federal Government, tested for qualification, in order that they may be eligible to be awarded contracts or orders for the products covered by this specification. The activity responsible for the qualified products list is the Naval Electronics Systems Command, however, information pertaining to qualification of products may be obtained from the Defense Electronics Supply Center (DESC-E), Dayton, Ohio 45444 Application for qualification tests shall be made in accordance with "Provisions Governing Qualification" (see 6 4 1)

6 4 1 Copies of SD-6, "Provisions Governing Qualification" may be obtained upon application to Commanding Officer, Naval Publication and Forms Center, 5801 Tabor Avenue, Philadelphia, PA 19120.

6 5 Finish colors Coating will vary in color depending on basic metal alloy and method of manufacture This variance in color does not alter the performance capabilities of the finish

6 6 Intermetallic contact The finishing of metallic areas to be placed in intimate contact by assembly presents a special problem, since intermetallic contact of dissimilar metals results in electrolytic couples which promote corrosion through galvanic action To provide the required corrosion protection, intermetallic couples are restricted to those permitted by table XI Table XI shows metals and alloys (or plates) by groups which have common electromotive forces (EMF) within 0 05 volt when coupled with a saturated calomel electrode in sea-water at room ambient temperatures All members of a group are considered as completely compatible, one with the other Compatible couples between groups have been specified in table XI based on a potential difference of 0 25 volt maximum To simplify any arithmetic involved, table XI shows, in addition to EMF against a calomel electrode, a derived "anodic index" with group 1 (gold, etc) as 0 and group 18 (magnesium, etc) as 175 Subtraction of a lower group anodic index gives the EMF difference in hundredths of a volt

6 6 1 Groups Table XI sets up 18 primary groups. It may be noted that neither the metallurgical similarity or dissimilarity of metals is the parameter for selection of compatible couples All members within a group, regardless of metallurgical similarity, are considered inherently nonsusceptible to galvanic action, when coupled with any member within the group, for example, such dissimilar metals as platinum and gold Similarly, such basically dissimilar alloys as austenitic stainless steel, silver-solder, and low brass (all members of group 5) are inherently nonsusceptible when coupled together

TABLE XI. Compatible couples (see 6.6). 1/

Group No.	Metallurgical category	EMF (volt)	Anodic index (0.01 v)	Compatible couples
1	Gold, solid and plated; gold-platinum alloys; wrought platinum (most cathodic)	+0.15	0	
2	Rhodium plated on silver-plated copper	+0.05	10	
3	Silver, solid or plated, high silver alloys	0	15	
4	Nickel, solid or plated, monel metal, high nickel-copper alloys	-0.15	30	
5	Copper, solid or plated, low brasses or bronzes, silver solder; German silver; high copper-nickel alloys, nickel-chromium alloys, austenitic corrosion-resistant steels	-0.20	35	
6	Commercial yellow brasses and bronzes	-0.25	40	
7	High brasses and bronzes; naval brass; Muntz metal	-0.30	45	
8	18 percent chromium type corrosion-resistant steels	-0.35	50	
9	Chromium, plated; tin, plated; 12 percent chromium type corrosion-resistant steels	-0.45	60	
10	Tin-plate, terneplate, tin-lead solder	-0.50	65	
11	Lead, solid or plated high lead alloys	-0.55	70	
12	Aluminum, wrought alloys of the duralumin type	-0.60	75	
13	Iron, wrought, gray, or malleable, plain carbon and low alloy steels, armco iron	-0.70	85	
14	Aluminum, wrought alloys other than duralumin type, aluminum, case alloys of the silicon type	-0.75	90	
15	Aluminum, cast alloys other than silicon type, cadmium, plated and chromated	-0.80	95	
16	Hot-dip-zinc plate, galvanized steel	-1.05	120	
17	Zinc, wrought, zinc-base die-casting alloys; zinc, plated	-1.10	125	
18	Magnesium and magnesium-base alloys, cast or wrought (most anodic)	-1.60	175	

1/ Compatible couples - potential difference of 0.25 volt maximum between groups.

6.6.2 Compatibility graphs Permissible couple series are shown in table XI by the graphs at the right Members of groups connected by lines will form permissible couples. A "O" indicates the most cathodic member of each series, a "●" an anodic member, and the arrow indicates the anodic direction

6.6 3 Selection of compatible couples. Proper selection of metals in the design of equipment will result in fewer intermetallic contact problems. For example, for sheltered exposure, neither silver nor tin require protective finishes. However, since silver has an anodic index of 15 and tin 65, the EMF generated as a couple is 0.50 volt, which is not allowable by table XI. In this case, other metals or plates will be required It should be noted that, in intermetallic couples, the member with the higher anodic index is anodic to the member with the lower anodic index and will be susceptible to corrosion in the presence of an electrolytic medium If the surface area of the cathodic part is significantly greater than that of the anodic part, the corrosive attack on the contact area of the anodic part may be greatly intensified. Material selection for intermetallic contact parts, therefore, should establish the smaller part as the cathodic member of the couple, whenever practicable.

6 6 4 Plating When base metals intended for intermetallic contact form couples not allowed by table XI, they are to be plated with those metals which will reduce the potential difference to that allowed by table XI.

6 7 Changes from previous issue Asterisks are not used in this revision to identify changes with respect to the previous issue, due to the extensiveness of the changes.

Custodians
Army - EL
Navy - EC
Air Force - 11

Review activities
Army - EL, MI, MU
Navy - SH, AS, OS, YD
Air Force - 11, 17, 80
DSA - ES

User activities
Army - MO
Navy - MC, CG
Air Force - 14, 19

Preparing activity
Navy - EC

Agent
DSA - ES

(Project 5935-1914)

APPENDIX

CLASS L CONNECTORS - ENGINEERING APPLICATION INFORMATION

10. SCOPE

10.1 This appendix provides engineering application information for the benefit of users of the MIL-C-22992, class L connectors

20 DESIGN APPLICATION

20 1 These connectors are a special design for power distribution using portable power cable They are designed for use where they will be subjected to severe impacts such as. dropping on concrete, run over by vehicles, or subjected to extremes of field service use They are arc quenching, if inadvertently separated under full load They are waterproof when mated or unmated, capped or uncapped. They are designed to meet all OSHA and National Electric Code requirements for grounding connectors

30 SAFETY SELECTIVITY

30 1 These connectors are designed with mating polarization for specific current rating, voltage, frequency (Hz), phase, and grounding requirements This prevents mating with a connector of incompatible power characteristics.

30 2 These connectors are designed in the sizes based on current rating as shown in table XII

TABLE XII. Connector sizes

Current rating (amps)	Shell size	Contact size	Insert arrangements available
40	28	#6	MS14054
60	32	#4	MS90565
100	44	#1/0	MS14055
150	48	#2/0	MS90567
200	52	#4/0	MS14057

30 3 These connectors are designed for use in the voltage, phase, wire, and frequency combinations as shown in table XIII

TABLE XIII Connector voltage, phase, wire and frequency

Voltage	Phase Ø	No wire	60 Hz	400 Hz
28 Vdc	-	2	N/A	N/A
120 ac 1/	1	2	X	X
240 ac	1	2	X	X
120/240 ac	1	3	X	N/A
120/208 ac	3	4	X	X
240/416 ac	3	4	X	X
277/480 ac	3	4	X	N/A

1/ All ac connectors have a separate contact (or contacts) for equipment system ground which is (are) electrically connected to the connector shell

40. CABLE INTERCONNECTION

40 1 These connectors are designed for direct plug-in connection to equipment, or to other class L connectors in "extension cord" fashion as shown in figure 5 This is provided by a "one way" system wherein each of the different numbered connector is designed and designated for use as shown in table XIV

TABLE XIV. Cable interconnection

Designated use	Connector MS number	Designed only with
Power receptacle	MS90555	Sockets
Cable Plug 1/	MS90556	Pins
Cable Plug 1/	MS90557	Sockets
Equipment receptacle	MS90558	Pins

1/ Coupling ring is on these connectors.

50. COMPLETE ASSEMBLIES

50 1 Each connector is supplied with a cap or cover In addition, each cable plug and cable receptacle is supplied with a cable gland and a cable grip. The cable grip is sized for the cable it will be used on This sizing is controlled by the insert pattern number

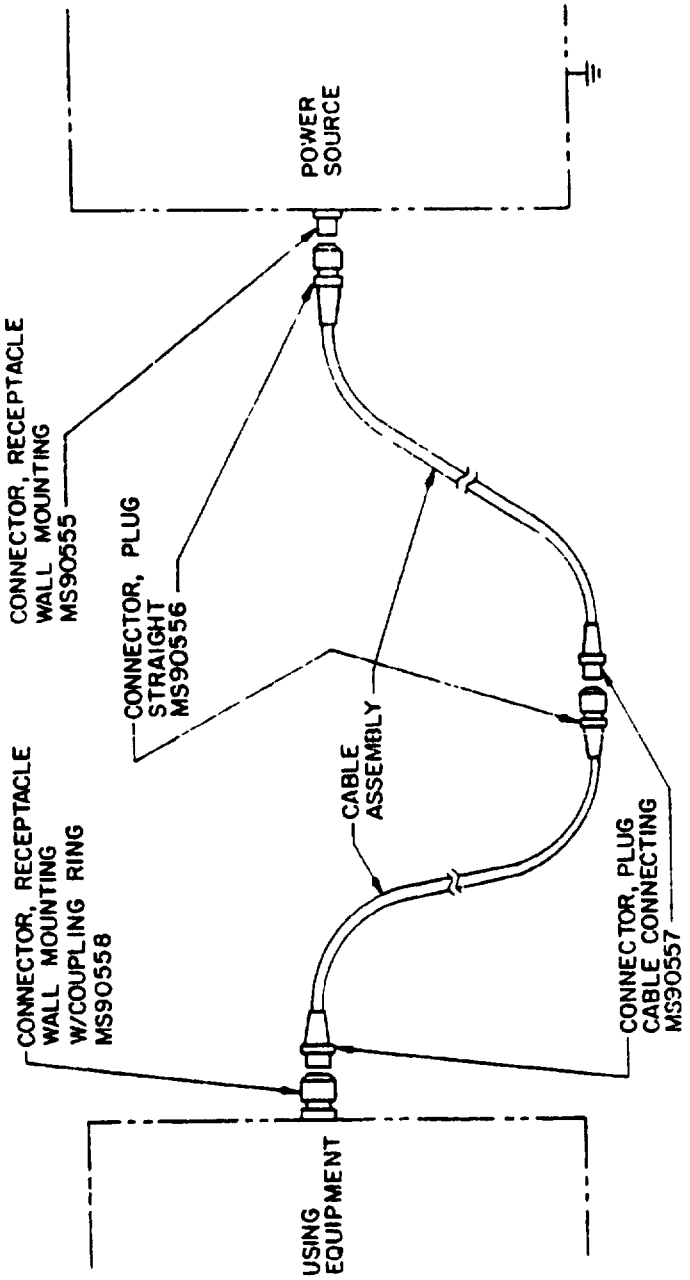

FIGURE 5. Class L cable interconnection.

FOLD

DEPARTMENT OF THE NAVY
NAVAL ELECTRONIC SYSTEMS COMMAND
WASHINGTON, D. C. 20360

POSTAGE AND FEES PAID
NAVY DEPARTMENT
DOD 316

OFFICIAL BUSINESS

COMMANDER
NAVAL ELECTRONIC SYSTEMS COMMAND
DEFENSE STANDARDIZATION PROGRAM BRANCH
DEPARTMENT OF THE NAVY
WASHINGTON, D. C. 20360

FOLD

U S G P O 1974-603 123/536

SPECIFICATION ANALYSIS SHEET

Form Approved
Budget Bureau No 22-R255

INSTRUCTIONS. This sheet is to be filled out by personnel, either Government or contractor, involved in the use of the specification in procurement of products for ultimate use by the Department of Defense This sheet is provided for obtaining information on the use of this specification which will insure that suitable products can be procured with a minimum amount of delay and at the least cost Comments and the return of this form will be appreciated Fold on lines on reverse side, staple in corner, and send to preparing activity Comments and suggestions submitted on this form do not constitute or imply authorization to waive any portion of the referenced document(s) or serve to amend contractual requirements

SPECIFICATION

ORGANIZATION

CITY AND STATE

CONTRACT NUMBER

MATERIAL PROCURED UNDER A

☐ DIRECT GOVERNMENT CONTRACT ☐ SUBCONTRACT

1. HAS ANY PART OF THE SPECIFICATION CREATED PROBLEMS OR REQUIRED INTERPRETATION IN PROCUREMENT USE?

A GIVE PARAGRAPH NUMBER AND WORDING

B. RECOMMENDATIONS FOR CORRECTING THE DEFICIENCIES

2 COMMENTS ON ANY SPECIFICATION REQUIREMENT CONSIDERED TOO RIGID

3 IS THE SPECIFICATION RESTRICTIVE?

☐ YES ☐ NO *(If "yes" in what way?)*

4 REMARKS *(Attach any pertinent data which may be of use in improving this specification If there are additional papers attach to form and place both in an envelope addressed to preparing activity)*

SUBMITTED BY *(Printed or typed name and activity - Optional)*

DATE

DD FORM 1 JAN 66 1426

REPLACES EDITION OF 1 OCT 64 WHICH MAY BE USED

S/N-0102-014-1801 C-25254