INCH-POUND
MS17344E
18 April 1994
SUPERSEDEING
MS17344D
12 August 1987

MILITARY SPECIFICATION SHEET

CONNECTOR, PLUG, ELECTRICAL, STRAIGHT

This specification is approved for use by all Departments and Agencies of the Department of Defense.

The requirements for acquiring the product described herein shall consist of this specification sheet and th issue of the following specification listed in that issue of the Department of Defense Index of Specifications and Standards (DODISS) specified in the solicitation: MIL-C-22992.

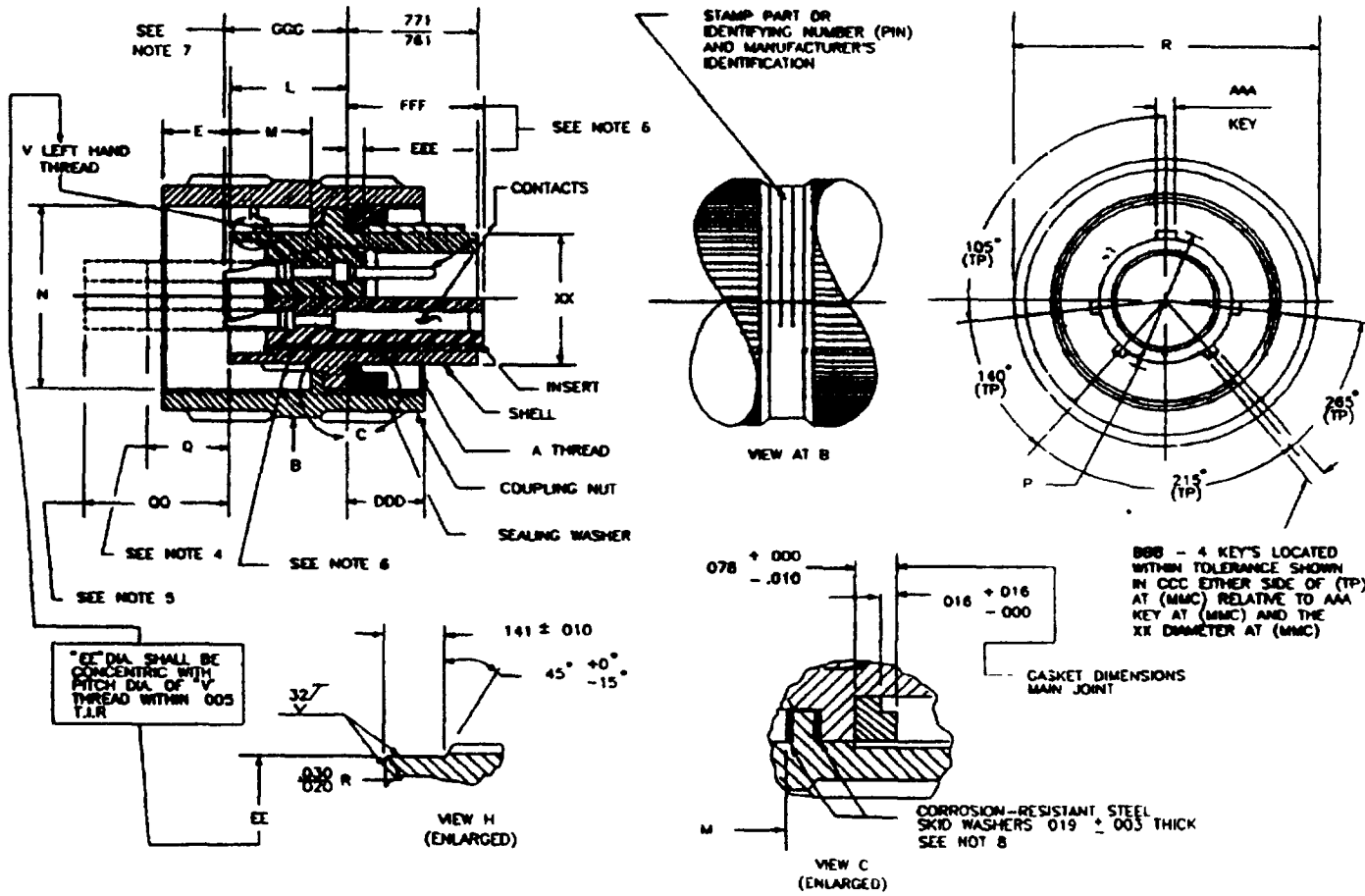

FIGURE 1. Dimensions and configuration.

AMSC N/A FSC 5935

DISTRIBUTION STATEMENT A Approved for public release; distribution is unlimited

Size	A thread (plated) class 2B	E max	L +.011 -.010	M ± 031	N dia + 010 - 001	P +.006 - 005	Q max	QQ max	R dia max
12	0.8750-0 1P-0.2L-DS	.100	.738	.529	.985	.627	.477	---	1.156
14	1 0000-0 1P-0 2L-DS	.100	738	.529	1 109	.752	477	1.027	1.281
16	1.1250-0.1P-0.2L-DS	.150	.738	.529	1 235	.877	477	1.027	1.469
18	1 2500-0.1P-0.2L-DS	.275	.738	529	1 359	1 002	.477	1.027	1.563
20	1 3750-0.1P-0 2L-DS	.275	.738	.529	1.485	1 128	.477	1.027	1.688
22	1.5000-0.1P-0.2L-DS	.275	738	529	1 609	1.252	.477	1.027	1.844
24	1.7500-0.1P-0.2L-DS	.275	800	529	1 859	1.453	417	.967	2.094
28	2.0000-0 1P-0 2L-DS	.275	.800	.529	2 109	1.672	.417	.967	2.344
32	2.2500-0.1P-0.2L-DS	.275	.875	.529	2.359	1.922	.342	.892	2.594
36	2.5000-0.1P-0.2L-DS	300	.875	.529	2.609	2 141	.342	.892	2.844
40	2.7500-0 1P-0 2L-DS	100	1.041	.717	2.922	2.391	.342	.892	3.156
44	3.0000-0.1P-0 2L-DS	.109	1.041	717	3.172	2 672	NA	NA	3.406

FIGURE 1 Dimensions and configuration - Continued

Size	V thread (plated) class 2A LH	EE dia +.001 -.007	XX dIA +.001 -.010	AAA	BBB	CCC	DDD	EEE pin insert lctn ±.030	FFF socket insert lctn ±.030	GGG max
12	.7500-20 UNEF	.672	.554	+.001 .115 -.007	+.001 .047 -.007	.0035	.655/.593	.084	.793	.898
14	.8750-20 UNEF	.797	.674	+.001 .115 -.007	+.001 .047 -.007	.0035	.655/.593	.084	.793	.898
16	1.0000-20 UNEF	.922	.804	+.001 .172 -.010	+.001 .078 -.010	.007	.655/.593	.084	.793	.898
18	1.1250-18 NEF	1.040	.929	+.001 .172 -.010	+.001 .078 -.010	.007	.655/.593	.084	.793	.898
20	1.2500-18 NEF	1.164	1.052	+.001 .172 -.010	+.001 .078 -.010	.007	.655/.593	.084	.793	.898
22	1.3750-18 NEF	1.289	1.177	+.001 .172 -.010	+.001 .078 -.010	.007	.655/.593	.084	.793	.898
24	1.6250-18 NEF	1.539	1.302	+.001 .250 -.010	+.001 .125 -.010	.007	.655/.593	.084	.793	.898
28	1.8750-16 UN	1.780	1.522	+.001 .250 -.010	+.001 .125 -.010	.007	.655/.593	.084	.793	.898
32	2.0625-16 N	1.967	1.772	+.001 .250 -.010	+.001 .125 -.010	.007	.677/.610	.084	.793	.898
36	2.3125-16 N	2.217	1.982	+.001 .250 -.010	+.001 .125 -.010	.007	.701/.634	.084	.793	.898
40	2.6250-16 UN	2.530	2.232	+.001 .250 -.010	+.001 .125 -.010	.007	.679/.618	.084	.793	.898
44	2.8750-16 UN	2.780	2.522	+.001 .250 -.010	+.001 .125 -.010	.007	.679/.618	.049	.774	1.062

FIGURE 1. Dimensions and configuration - Continued.

Inches	mm	Inches	mm	Inches	mm	Inches	mm	Inches	mm
.001	0 03	.300	7.62	.8750	20.32	1.302	33.07	2.141	54.38
.003	0 08	.342	8.69	.875	20.42	1.359	34.52	2.217	56.31
.0035	0.089	.417	10.59	.877	22.225	1.3750	34.925	2.232	56.697
.005	0.13	.477	15.49	.892	22.23	1.453	33.91	2.2500	57.050
.006	0.15	.529	13.44	.898	22.28	1.469	37.31	2.3125	58.737
.007	0.18	.554	14.07	.922	22.66	1.485	37.72	2.344	59.54
.010	0.25	.593	15.06	.929	22.81	1.5000	38.100	2 359	59 92
.011	0.28	.610	15.49	.967	23.42	1.522	38.66	2.391	60.730
.016	0.41	.618	15.70	.985	23.60	1.539	39.09	2.5000	63.500
.019	0.48	.627	15.98	1.000	25.40	1.563	39.70	2.522	64.06
.020	0.51	.655	16.64	1.002	25.45	1.609	40.87	2.530	64.265
.030	0.76	.672	17.07	1.027	26.09	1.6250	41.275	2.594	65.89
.031	0.79	.674	17.12	1.040	26.42	1.672	42.47	2.6250	66.675
.047.	1.19	.677	17.12	1.041	26.44	1.688	42.88	2.629	66.78
.049	1.24	.679	17.25	1.052	26.72	1.7500	44.458	2.672	67.87
.062	1.57	.701	17.81	1.062	26.97	1.772	45.01	2.7500	69.850
.078	1.98	.717	18.21	1.109	28.17	1.780	45.21	2.780	70.61
.084	2.13	.738	18.75	1.1250	28.575	1.844	46.845	2.844	72.24
100	2.54	.7500	19.050	1.128	28.65	1.859	48.22	2.8750	73.035
.109	2.77	.752	19.10	1.156	29.36	1.8750	47.625	2.922	74.22
115	2.92	.761	19.33	1.164	29.57	1.9225	48.81	3.0000	76.200
.125	3.18	.771	19.58	1.177	29.90	1.967	49.96	2.156	80.16
.141	3.58	.774	19.66	1.235	31.37	1.982	90.34	3.172	80.57
.150	3.81	.793	20.14	1.2500	31.750	2.000	50.800	3.406	86.51
.172	4.37	.797	20.24	1.252	31.80	2.0625	52.388		
.250	6.35	.800	20.14	1.281	31.54	2.094	53.19		
.275	6.99	.804	20.24	1.289	32.74	2.109	53.570		

NOTES:

1. All dimensions are in inches.
2. Unless otherwise specified tolerances are ±.016 (0.41mm).
3. Metric equivalents are given for information only.
4. Maximum termination of grommet extension for sizes 12 and 16 contacts for class J.
5. Maximum termination of grommet extension for sizes 0, 4 and 8 contacts for class J.
6. Dimensions shall be maintained when inserts are pressed firmly against indicated shoulder.
7. Dimensions shall be 1.210 (30.73 mm) maximum to .920 (23.37 mm) minimum for size 0 contacts only.
8. Front and rear washers for sizes 32 and 36 only. Rear washers only for sizes 40 and 44.

FIGURE 1 Dimensions and configuration - Continued.

REQUIREMENTS

Mates with receptacles shown on MS17343, MS17345, MS17346, MS17347, MS17348, MS18062 and covers shown on MS17350.

Part or Identifing Number (PIN) example:

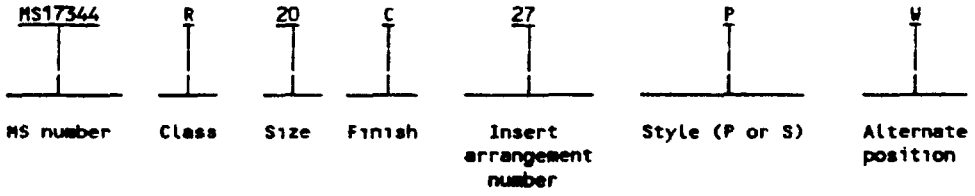

Class shall be designated by the letter C (pressurized), J (pressurized with grommet) or R (environmental resisting).

For shell size, insert arrangement, alternate position, contact size, spacing, and service rating, see MIL-STD-1651

Shell finish shall be designated by the letter C (conductive) or N (nonconductive).

Qualification:

QPL evaluating activity. Defense Electronics Supply center, (DESC-E), Dayton, OH 45444-5270

Revision letters are not used to denote changes due to the extensiveness of the changes.

CONCLUDING MATERIAL

Custodians:
Army - CR
Navy - EC
Air Force - 85
NASA - NA

Review activities:
Army - AR, MI
Navy - AS, YD
Air Force - 99

User activities:
Navy - CG, MC, OS, SH
Air Force - ' 19

Preparing activity:
DLA - ES

(Project number 5935-3934)