This military standard is approved for use by all Departments and Agencies of the Department of Defense. Selection for all new engineering and design applications and for repetitive use shall be made from this document when applicable.

Review activities: Army - AR, MI; Navy - AS, YD; Air Force - 11, 99

User activities: Army -; Navy - CG, MC, OS, SH; Air Force - 14, 19

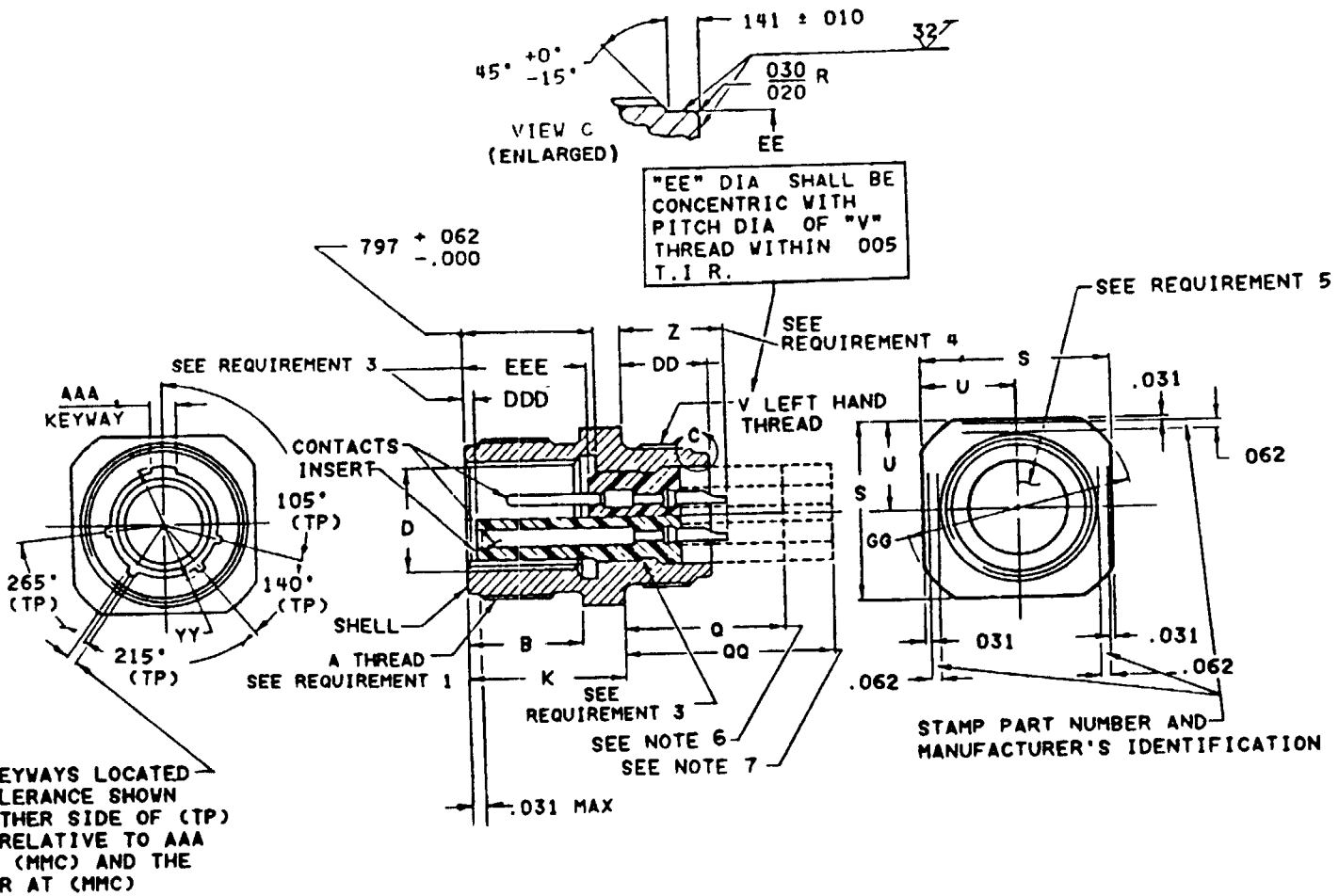

(D) ENTIRE STANDARD REVISED

P A NAVY - EC

Other Cust ARMY - CR AF - 85

International interest

Procurement Specification MIL-C-22992

SUPERSEDES

TITLE

CONNECTOR, PLUG, ELECTRICAL, CABLE CONNECTING, (FEMALE)

MILITARY STANDARD

MS17345

PAGE 1 OF 4

FED SUP CLASS 5935

APPROVED 2 Oct 1961 REVISED (A) 1 May 1964 (B) 1 June 1966 (C) 30 September 1986 (D) 12 AUGUST 1987

DD FORM 1 MAY 73 672 (Coordinated) PREVIOUS EDITIONS OF THIS FORM ARE OBSOLETE

AMSC N/A

DISTRIBUTION STATEMENT A. Approved for public release, distribution is unlimited.

5935-3605-03

FED SUP CLASS
5935

Size	A Thread (plated) class 2A	B +.016 -.000	D Dia +.005 -.010	K +.021 -.020	Q Max	QQ Max	S +.021 -.020	U ±.010	V Thread (plated) class 2A LH
12	0.8750-0.1P-0.2L-DS	.688	.567	.938	1.055	--	1.000	.500	.7500-20 UNEF
14	1.0000-0.1P-0.2L-DS	.688	.692	.938	1.055	1.605	1.094	.547	.8750-20 UNEF
16	1.1250-0.1P-0.2L-DS	.688	.817	.938	1.055	1.605	1.281	.641	1.0000-20 UNEF
18	1.2500-0.1P-0.2L-DS	.703	.942	.953	1.040	1.590	1.375	.688	1.1250-18 NEF
20	1.3750-0.1P-0.2L-DS	.703	1.068	.953	1.040	1.590	1.500	.750	1.2500-18 NEF
22	1.5000-0.1P-0.2L-DS	.703	1.192	.953	1.040	1.590	1.625	.812	1.3750-18 NEF
24	1.7500-0.1P-0.2L-DS	.766	1.317	1.016	.977	1.527	1.875	.938	1.6250-18 NEF
28	2.0000-0.1P-0.2L-DS	.766	1.536	1.016	.977	1.527	2.125	1.062	1.8750-16 UN
32	2.2500-0.1P-0.2L-DS	.703	1.786	1.078	.915	1.465	2.375	1.188	2.0625-16 N
36	2.5000-0.1P-0.2L-DS	.703	2.005	1.078	.915	1.465	2.625	1.312	2.3125-16 N
40	2.7500-0.1P-0.2L-DS	.703	2.255	1.078	.915	1.465	3.000	1.500	2.6250-16 UN
44	3.0000-0.1P-0.2L-DS	.703	2.545	1.078	NA	NA	3.250	1.625	2.8750-16 UN

APPROVED 2 Oct 1961 REVISED (D) ENTIRE STANDARD REVISED

P A NAVY - EC

Other Cust
ARMY - CR
AF - 85

International Interest

TITLE CONNECTOR, PLUG, ELECTRICAL, CABLE CONNECTING, (FEMALE)

MILITARY STANDARD

MS 17345

Procurement Specification
MIL-C-22992

SUPERSEDES

DD FORM 1 MAY 73 672 (Coordinated) PREVIOUS EDITIONS OF THIS FORM ARE OBSOLETE

This military standard is approved for use by all Departments and Agencies of the Department of Defense. Selection for all new engineering and design applications and for repetitive use shall be made from this document when applicable

Review activities Army - AR, MI Navy - AS, YD Air Force - 11, 99

User activities Army - Navy - CG, MC, OS, SH Air Force - 14, 19

FED SUP CLASS
5935

Size	DD ±.010	EE Dia +.001 -.007	GG Dia	YY Dia +.010 -.006	AAA	BBB	CCC	DDD Socket insert lctn ±.030	EEE Pin insert lctn ±.030	Z Max (see req 4)	Z Min (size 0 only)
12	.641	.672	1.250	.647	.126 +.007 -.001	.063 +.007 -.001	.0035	.020	.729	.726	NA
14	.641	.797	1.375	.772	.126 +.007 -.001	.063 +.007 -.001	.0035	.020	.729	.726	
16	.641	.922	1.500	.897	.182 +.010 -.001	.108 +.010 -.001	.007	.020	.729	.726	
18	.625	1.040	1.625	1.022	.182 +.010 -.001	.108 +.010 -.001	.007	.020	.729	.711	
20	.625	1.164	1.750	1.148	.182 +.010 -.001	.108 +.010 -.001	.007	.020	.729	.711	.780
22	.625	1.289	1.875	1.272	.182 +.010 -.001	.108 +.010 -.001	.007	.020	.729	.711	
24	.625	1.539	2.125	1.473	.260 +.010 -.001	.155 +.010 -.001	.007	.020	.729	.648	.717
28	.625	1.780	2.375	1.692	.260 +.010 -.001	.155 +.010 -.001	.007	.020	.729	.648	
32	.563	1.967	2.625	1.942	.260 +.010 -.001	.155 +.010 -.001	.007	.020	.729	.576	
36	.563	2.217	2.875	2.161	.260 +.010 -.001	.155 +.010 -.010	.007	.020	.729	.576	.655
40	.703	2.530	3.125	2.411	.260 +.010 -.001	.155 +.010 -.001	.007	.020	.729	.576	
44	.703	2.780	3.500	2.692	.260 +.010 -.001	.155 +.010 -.001	.007	.039	.764	.797	

APPROVED 2 Oct 1961 REVISED (D) ENTIRE STANDARD REVISED

User activities: Army - CG, MC, OS, SH; Navy - 14, 19; Air Force - 14, 19

Review activities: Army - AR, MI; Navy - AS, YD; Air Force - 11, 99

This military standard is approved for use by all Departments and Agencies of the Department of Defense. Selection for all new engineering and design applications and for repetitive use shall be made from this document when applicable

P A NAVY - EC

Other Cust
ARMY - CR
AF - 85

International interest

TITLE
CONNECTOR, PLUG, ELECTRICAL, CABLE CONNECTING, (FEMALE)

MILITARY STANDARD

MS 17345

Procurement Specification
MIL-C-22992

SUPERSEDES

DD FORM 1 MAY 73 672 (Coordinated) PREVIOUS EDITIONS OF THIS FORM ARE OBSOLETE

FED SUP CLASS
5935

Inches	mm	Inches	mm	Inches	mm	Inches	mm
.001	0.03	.686	17.34	1.068	27.13	1.786	45.36
.0035	0.089	.688	17.48	1.078	27.97	1.8750	47.630
.005	0.13	.692	17.58	1.094	28.78	1.875	47.63
.006	0.15	.703	17.86	1.1250	28.575	1.942	49.33
.007	0.18	.711	18.06	1.148	29.16	1.967	49.96
.010	0.25	.717	18.21	1.1640	29.57	2.0000	50.800
.016	0.41	.726	14.44	1.188	30.18	2.005	50.93
.020	0.51	.729	18.52	1.192	30.28	2.0625	52.588
.021	0.53	.7500	19.050	1.2500	31.750	2.125	53.98
.030	0.76	.750	19.05	1.250	31.75	2.161	54.89
.031	0.79	.764	19.41	1.272	32.31	2.217	56.31
.039	0.99	.766	19.46	1.281	32.54	2.2500	57.150
.062	1.57	.772	19.61	1.289	33.74	2.255	57.28
.063	1.60	.780	19.81	1.312	33.32	2.3125	58.737
.108	2.74	.797	20.24	1.317	33.45	2.375	60.33
.126	3.20	.812	20.62	1.3750	34.925	2.411	61.24
.141	3.58	.817	20.75	1.375	34.93	2.5000	63.500
.155	3.94	.8750	22.225	1.465	37.21	2.530	64.26
.182	4.62	.897	22.78	1.473	37.41	2.545	64.64
.260	6.60	.915	23.24	1.5000	38.100	2.6250	66.675
.500	12.70	.922	23.42	1.500	38.10	2.625	67.31
.547	13.89	.938	23.82	1.527	38.79	2.692	68.38
.563	14.30	.942	23.93	1.536	39.01	2.7500	69.850
.567	14.40	.953	24.21	1.539	39.09	2.764	70.21
.576	14.63	.977	24.82	1.590	40.39	2.780	70.61
.622	15.80	1.0000	25.400	1.605	40.77	2.8750	73.025
.625	15.86	1.000	25.40	1.6250	41.275	2.875	73.03
.641	16.28	1.016	25.81	1.625	41.28	3.0000	76.200
.647	16.43	1.022	25.96	1.692	42.98	3.000	76.20
.648	16.45	1.040	24.41	1.7500	44.450	3.125	79.38
.655	16.64	1.055	26.80	1.750	44.45	3.250	82.55
.672	17.06	1.062	26.97	1.780	45.21	3.500	88.90

REQUIREMENTS.

1. Mates with plug shown on standard MS17344.
2. The part number shall include the class, size, finish, insert arrangement, style (P or S) and alternate position as shown in the example below.

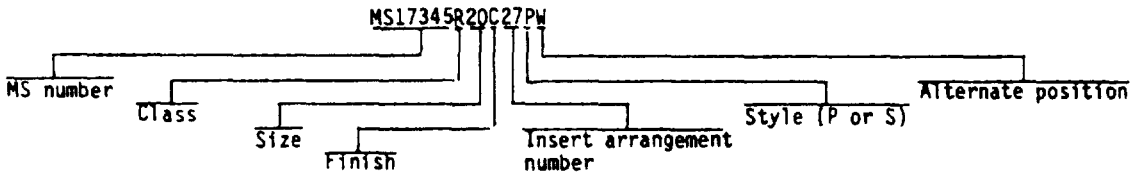

3. Dimensions shall be maintained when inserts are pressed firmly against indicated shoulder.
4. For size 0 contacts only, increase Z dimension by .312 (7.92 mm) for shell sizes 12 through 40 and by .062 (1.57 mm) for shell size 44.
5. For size, insert arrangement, alternate position, contact size, spacing and service rating, see MIL-STD-1651.
6. Shell finish shall be designated by the letter C (conductive) or N (nonconductive).

NOTES

1. All dimensions are in inches.
2. Unless otherwise specified tolerances are ±.016 (0.41 mm).
3. Metric equivalents are given for general information only.
4. In the event of a conflict between the text of this standard and the references cited herein, the text of this standard shall take precedence.
5. Referenced Government documents of the issue listed in that issue of the Department of Defense Index of Specifications and Standards (DODISS) specified in the solicitation form a part of this standard to the extent specified herein.
6. Maximum termination of grommet extension for sizes 12 and 16 contacts for class J.
7. Maximum termination of grommet extension for sizes 0, 4 and 8 contacts for class J.
8. For protective cover, see MS17349, type A.

APPROVED 2 Oct 1961 REVISED (D) ENTIRE STANDARD REVISED

P A NAVY - EC Other Cust ARMY - CR AF - 85	International interest	TITLE CONNECTOR, PLUG, ELECTRICAL, CABLE CONNECTING, (FEMALE)	MILITARY STANDARD MS17345
Procurement Specification MIL-C-22992		SUPERSEDES	PAGE 4 OF 4

DD FORM 1 MAY 73 672 (Coordinated) PREVIOUS EDITIONS OF THIS FORM ARE OBSOLETE

This military standard is approved for use by all Departments and Agencies of the Department of Defense. Selection for all new engineering and design applications and for repetitive use shall be made from this document when applicable

Review activities: Army - AR, MI; Navy - AS, YD; Air Force - 11, 99

User activities: Army - CG, MC, OS, SH; Navy; Air Force - 14, 19