This military standard is approved for use by all Departments and Agencies of the Department of Defense. Selection for all new engineering and design applications and for repetitive use shall be made from this document when applicable.

Review activities: Army - AR, MI; Navy - AS, YD; Air Force - 11, 99

User activities: Army - ; Navy - CG, MC, OS, SH; Air Force - 14, 19

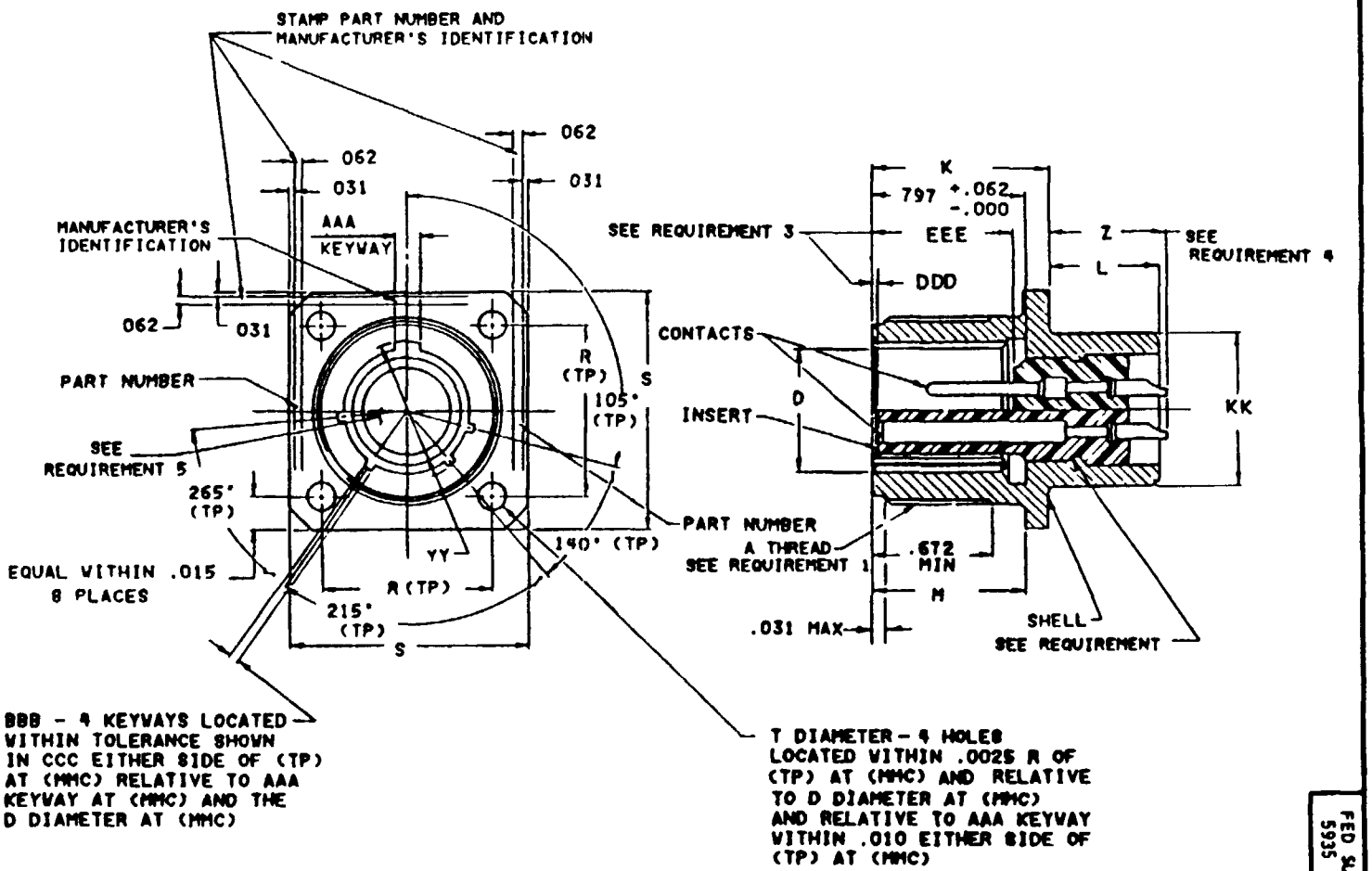

FED SUP CLASS 5935

APPROVED 2 Oct 1961 REVISED (A) 1 May 1964 (B) 1 June 1966 (C) 30 September 1986 (D) 12 AUGUST 1987

(D) ENTIRE STANDARD REVISED

P A NAVY - EC

Other Cust: ARMY - CR, AF - 85

Procurement Specification: MIL-C-22992

TITLE: CONNECTOR, RECEPTACLE, ELECTRICAL, BOX MOUNTING

SUPERSEDES

MILITARY STANDARD

MS17346

PAGE 1 OF 4

DD FORM 1 MAY 73 672 (Coordinated/previous editions of this form are obsolete)

NMSC N/A

5935-3605-04

DISTRIBUTION STATEMENT A. Approved for public release, distribution is unlimited

FED SUP CLASS
5935

Size	A Thread (plated) class 2A	D Dia +.005 -.010	K +.021 -.010	L +.020 -.030	M +.010 -.000	R (TP)	S +.021 -.020	T Dia ±.005	KK Dia +.011 -.010
12	0.8750-0.1P-0.2L-DS	.567	.938	.640	.797	.906	1.188	.150	.640
14	1.0000-0.1P-0.2L-DS	.692	.938	.640	.797	.969	1.281	.150	.765
16	1.1250-0.1P-0.2L-DS	.817	.938	.640	.797	1.062	1.375	.150	.890
18	1.2500-0.1P-0.2L-DS	.942	.953	.625	.797	1.156	1.500	.177	1.015
20	1.3750-0.1P-0.2L-DS	1.068	.953	.625	.797	1.250	1.625	.177	1.171
22	1.5000-0.1P-0.2L-DS	1.068	.953	.625	.797	1.375	1.750	.177	1.296
24	1.7500-0.1P-0.2L-DS	1.317	1.047	.594	.859	1.562	2.000	.177	1.421
28	2.0000-0.1P-0.2L-DS	1.536	1.047	.594	.859	1.750	2.250	.177	1.625
32	2.2500-0.1P-0.2L-DS	1.786	1.110	.531	.922	1.938	2.500	.209	1.891
36	2.5000-0.1P-0.2L-DS	2.005	1.110	.531	.922	2.188	2.750	.209	2.078
40	2.7500-0.1P-0.2L-DS	2.255	1.110	.531	.922	2.375	3.000	.209	2.312
44	3.0000-0.1P-0.2L-DS	2.545	1.110	.531	.922	2.625	3.250	.209	2.562

APPROVED 2 Oct 1961 REVISED (D) ENTIRE STANDARD REVISED

This military standard is approved for use by all Departments and Agencies of the Department of Defense. Selection for all new engineering and design applications and for repetitive use shall be made from this document when applicable

Review activities: Army - AR, MI; Navy - AS, YD; Air Force - 11, 99

User activities: Army - ; Navy - CG, MC, OS, SH; Air Force - 14, 19

FED SUP CLASS
5935

Size	YY Dia +.010 -.006	AAA	BBB	CCC	DDD socket insert lctn ±.030	EEE pin insert lctn ±.030	Z Max (see req 4)	Z Min size 0 only
12	.647	+.007 .126 -.001	+.007 .063 -.001	.0035	.020	.729	.738	Not applicable
14	.772	+.007 .126 -.001	+.007 .063 -.001	.0035	.020	.729	.738	
16	.897	+.010 .182 -.001	+.010 .108 -.001	.007	.020	.729		
18	1.022	+.010 .182 -.001	+.010 .108 -.001	.007	.020	.729	.723	
20	1.148	+.010 .182 -.001	+.010 .108 -.001	.007	.020	.729		.780
22	1.272	+.010 .182 -.010	+.010 .108 -.010	.007	.020	.729		
24	1.473	+.010 .260 -.001	+.010 .155 -.001	.007	.020	.729	.660	.686
28	1.692	+.010 .260 -.001	+.010 .155 -.001	.007	.020	.729		
32	1.942	+.010 .260 -.001	+.010 .155 -.001	.007	.020	.729	.540	.622
36	2.161	+.010 .260 -.001	+.010 .155 -.001	.007	.020	.729		
40	2.411	+.010 .260 -.010	+.010 .155 -.010	.007	.020	.729		
44	2.692	+.010 .260 -.010	+.010 .155 -.010	.007	.039	.764		

APPROVED REVISED (D) ENTIRE STANDARD REVISED

User activities: Army - CG, MC, OS, SH; Navy; Air Force - 14, 19

Review activities: Army - AR, MI; Navy - AS; Air Force - 11, 99

This military standard is approved for use by all Departments and Agencies of the Department of Defense. Selection for all new engineering and design applications and for repetitive use shall be made from this document when applicable.

P A NAVY - EC Other Cust ARMY - CR AF - 85	Intermediate Interior	TITLE CONNECTOR, RECEPTACLE, ELECTRICAL, BOX MOUNTING	MILITARY STANDARD MS17346
Procurement Specification MIL-C-22992		SUPERSEDES	PAGE 3 OF 4

DD FORM 1 MAY 73 672 (Coordinated) PREVIOUS EDITIONS OF THIS FORM ARE OBSOLETE

FED SUP CLASS
5935

Inches	mm	Inches	mm	Inches	mm	Inches	mm
.001	0.03	.625	15.88	1.015	25.78	1.750	44.45
.0035	0.089	.640	16.26	1.022	25.96	1.786	45.36
.005	0.13	.647	16.43	1.047	26.59	1.891	48.03
.006	0.15	.660	16.76	1.062	26.97	1.938	49.23
.007	0.18	.672	17.06	1.068	27.13	1.942	49.33
.010	0.25	.686	17.42	1.110	28.19	2.0000	50.800
.011	0.28	.692	17.58	1.1250	28.575	2.000	50.80
.020	0.51	.723	18.36	1.148	29.16	2.005	50.93
.021	0.53	.729	18.52	1.156	29.36	2.078	52.78
.030	0.76	.738	18.75	1.171	29.74	2.161	54.89
.031	0.79	.764	19.41	1.188	30.18	2.188	55.58
.039	0.99	.765	19.43	1.2500	31.750	2.2500	57.150
.062	1.57	.772	19.61	1.250	31.75	2.250	57.15
.063	1.60	.780	19.81	1.272	32.31	2.255	57.27
.108	2.74	.797	20.24	1.281	32.54	2.312	58.72
.126	3.20	.817	20.75	1.296	32.91	2.375	60.33
.150	3.81	.859	21.81	1.317	33.45	2.411	61.24
.155	3.93	.8750	22.225	1.3750	34.925	2.5000	63.500
.177	4 50	.890	22.61	1.375	34.93	2.500	63 50
.182	4.62	.897	22.78	1.421	36.09	2.545	64.64
.209	5.30	.906	23 01	1.473	37.41	2.562	65.07
.260	6.60	.922	23.42	1.500	38.10	2.625	66.68
.531	13.49	.938	23.82	1.536	39.01	2.692	68.37
.540	13.72	.942	23.93	1.562	39.67	2.7500	69.850
.567	14.40	.953	24.21	1.625	41.27	2.750	69.85
.594	15.09	.969	24.61	1.692	42.98	3.0000	76.200
.622	15.80	1.0000	25.400	1.7500	44.450	3.000	76.20
						3.250	82.55

REQUIREMENTS

1. Mates with plug shown on standard MS17344.
2. The part number shall include the class, size, finish, insert arrangement, style (P or S) and alternate position as shown in the example below.

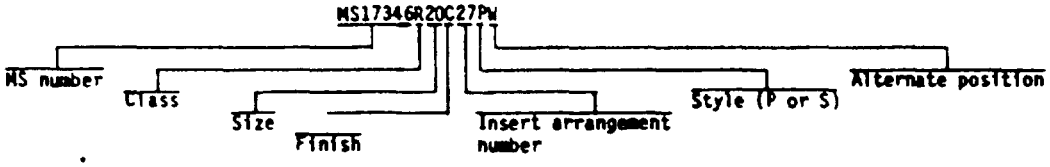

3. Dimensions shall be maintained when inserts are pressed firmly against indicated shoulder.
4. For size 0 contacts only, increase Z dimension by .312 (7.92 mm) for shell sizes 12 through 40 and by .062 (1.57 mm) for shell size 44.
5. For contact size, spacing and service rating, see MIL-STD-1651.
6. Shell finish shall be designated by the letter C (conductive) or N (nonconductive).

NOTES

1. All dimensions are in inches.
2. Unless otherwise specified tolerances are ±.016 (0.41 mm).
3. Metric equivalents are given for general information only.
4. In the event of a conflict between the text of this standard and the references cited herein, the text of this standard shall take precedence.
5. Referenced Government documents of the issue listed in that issue of the Department of Defense Index of Specifications and Standards (DODISS) specified in the solicitation form a part of this standard to the extent specified herein.
6. For protective cover see MS17349.

APPROVED 2 Oct 1961 REVISED (D) ENTIRE STANDARD REVISED

P A NAVY - EC Other Cust ARMY - CR AF - 85	International Interest	TITLE CONNECTOR, RECEPTACLE, ELECTRICAL, BOX MOUNTING	MILITARY STANDARD MS17346
Procurement Specification MIL-C-22992		SUPERSEDES	PAGE 4 OF 4

DD FORM 1 MAY 73 672 (Coordinated) PREVIOUS EDITIONS OF THIS FORM ARE OBSOLETE

This military standard is approved for use by all Departments and Agencies of the Department of Defense. Selection for all new engineering and design applications and for repetitive use shall be made from this document when applicable

Review activities Army - AR, MI Navy - AS, YD Air Force - 11, 99

User activities Army - CG, MC, OS, SH Navy - Air Force - 14, 19