military standard has been approved by the Department of Defense and is mandatory for by all Departments and Agencies of the Department of Defense. Selection for all new eering and design applications and for repetitive use shall be made from this document.

Review user information is current as of the date of this document. For future coordination of changes to this document, draft circulation should be based on the information in the current DODISS (FSC listing).
AF (a) 14, 19+11, 17, 85 Army (a) MO+ EL, MI, MU Navy (a) MC, CG+ SH, AS, OS

(B) ENTIRE STANDARD REVISED (Project 5935-1355-13)

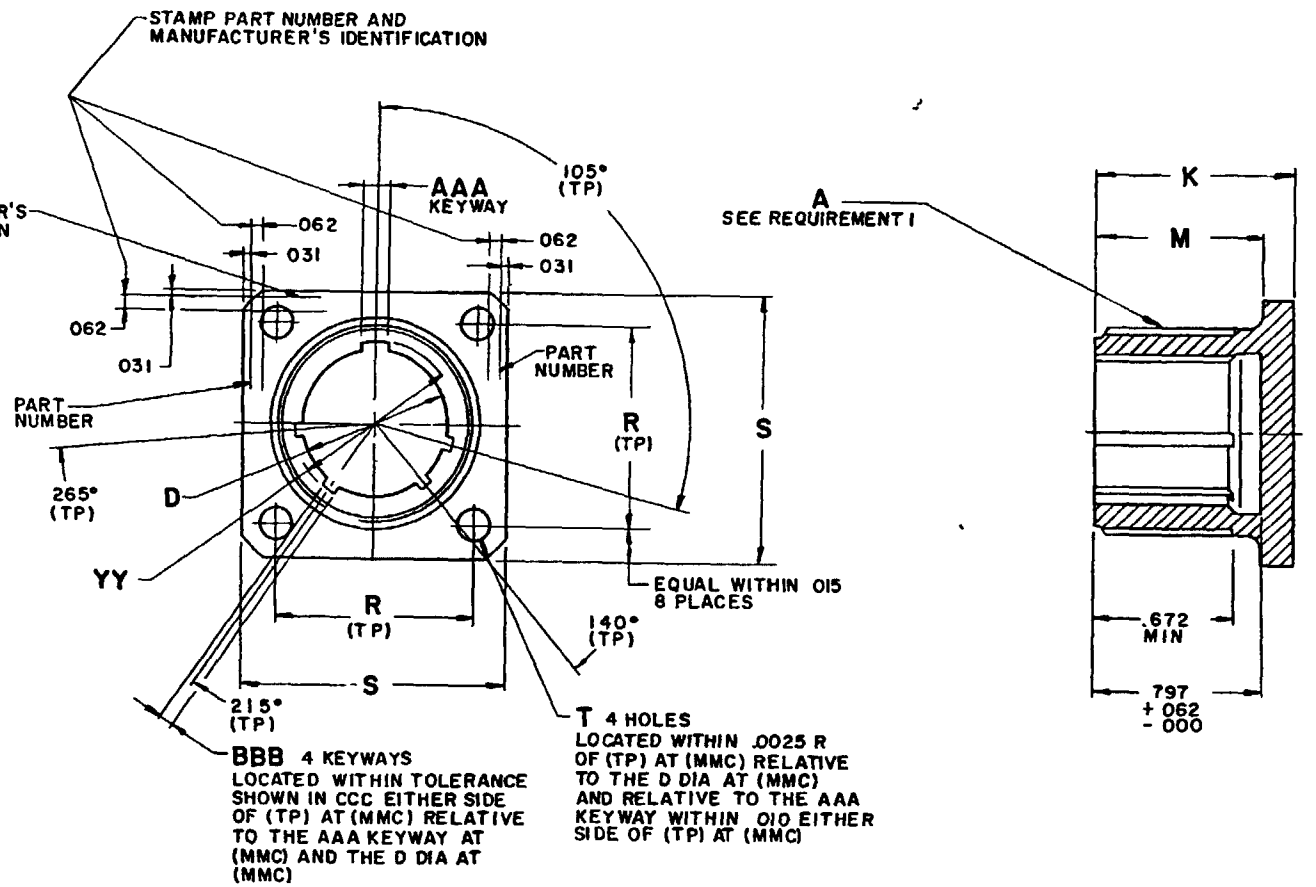

P A NAVY-SH	Other Cust ARMY-EL AF-11	International Interest	Procurement Specification MIL-C-22992
TITLE CONNECTOR, RECEPTACLE, DUMMY STOWAGE		SUPERSEDES	
MILITARY STANDARD MS18062		SHEET 1 OF 2	

FED SUP CLASS 5935

APPROVED 1 JULY 1963 REVISED (A) 1 MAY 1964 (B) 1 JUNE 1966

FED SUP CLASS
5935

SIZE	A THREAD (PLATED) CLASS 2A	D DIA +.005 -.010	K ±.021 -.010	M +.010 -.000	R (TP)	S +.021 -.020	T DIA ±.005	YY DIA +.010 -.006	AAA	BBB	CCC
12	.8750-0.1P-0.2L-DS	.567	.938	.797	.906	1.188	.150	.647	.126 +.007 -.001	.063 +.007 -.001	.0035
14	1.0000-0.1P-0.2L-DS	.692	.938		.969	1.281	.150	.772	.126 +.007 -.001	.063 +.007 -.001	.0035
16	1.1250-0.1P-0.2L-DS	.817	.938		1.062	1.375	.150	.897	.182 +.010 -.001	.108 +.010 -.001	.0070
18	1.2500-0.1P-0.2L-DS	.942	.953		1.156	1.500	.177	1.022			
20	1.3750-0.1P-0.2L-DS	1.068	.953		1.250	1.625		1.148			
22	1.5000-0.1P-0.2L-DS	1.192	.953	.797	1.375	1.750		1.272	.182 +.010 -.001	.108 +.010 -.001	
24	1.7500-0.1P-0.2L-DS	1.317	1.047	.859	1.562	2.000		1.473	.260 +.010 -.001	.155 +.010 -.001	
28	2.0000-0.1P-0.2L-DS	1.536	1.047	.859	1.750	2.250	.177	1.692			
32	2.2500-0.1P-0.2L-DS	1.786	1.110	.922	1.938	2.500	.209	1.942			
36	2.5000-0.1P-0.2L-DS	2.005	1.110	.922	2.188	2.750	.209	2.161			
40	2.7500-0.1P-0.2L-DS	2.255	1.110	.922	2.375	3.000	.209	2.411	.260 +.010 -.001	.155 +.010 -.001	.0070

REQUIREMENTS:
1. Mates with plug shown on standard MS17344.
2. Shell finish shall be designated by the letter C (conductive) or N (non-conductive).
3. The part number shall include finish and size as shown in the example below.

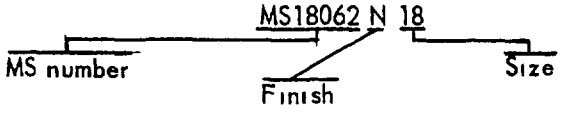

NOTES:
1. For design feature purposes, this standard takes precedence over procurement documents referenced herein.
2. Referenced documents shall be of the issue in effect on date of invitations for bid.
3. All dimensions are in inches. Unless otherwise specified, tolerance is ±.016.

APPROVED 1 JULY 1963 REVISED (B) ENTIRE STANDARD REVISED

P A NAVY-SH Other Cust ARMY-EL AF-11	International Interest	TITLE CONNECTOR, RECEPTACLE DUMMY STOWAGE	MILITARY STANDARD MS 18062
Procurement Specification MIL-C-22992		SUPERSEDES:	SHEET 2

Military standard has been approved by the Department of Defense and is mandatory for use by all Departments and Agencies of the Department of Defense. Selection for all new engineering and design applications and for repetitive use shall be made from this document.

Reviewer/user information is current as of the date of this document. For future coordination of changes to this document, draft circulation should be based on the information in the current DODISS (FSC listing).

Navy Army AF