INCH-POUND
MS90557F
14 JUNE 1995
SUPERSEDING
MS90557E
7 February 1980

MILITARY SPECIFICATION SHEET

CONNECTOR, PLUG, ELECTRICAL, CABLE CONNECTING (WITHOUT COUPLING RING), CLASS L

This specification is approved for use by all Departments and Agencies of the Department of Defense.

The requirements for acquiring the product described herein shall consist of this specification sheet and the issue of the following specification listed in that issue of the Department of Defense Index of Specifications and Standards (DODISS) specified in the solicitation: MIL-C-22992.

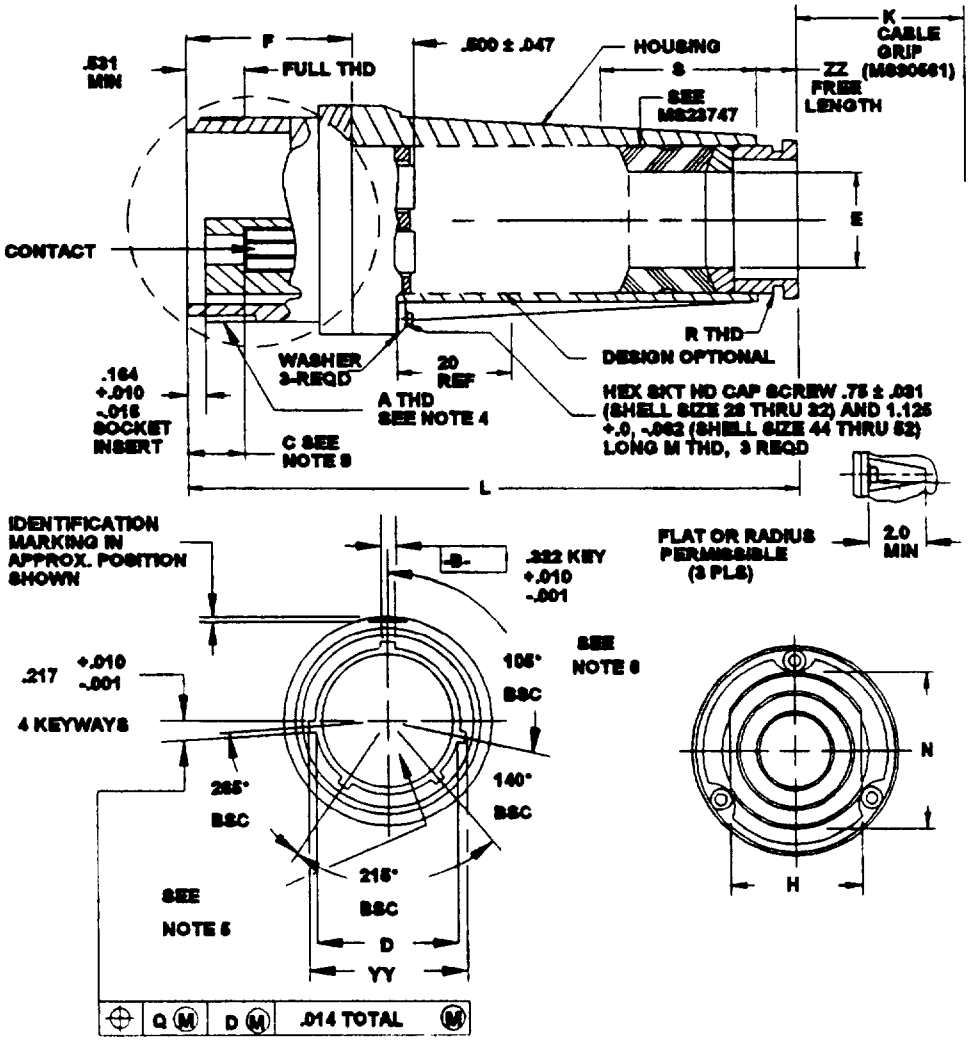

FIGURE 1. Dimensions and configurations.

DISTRIBUTION STATEMENT A Approved for public release; distribution is unlimited

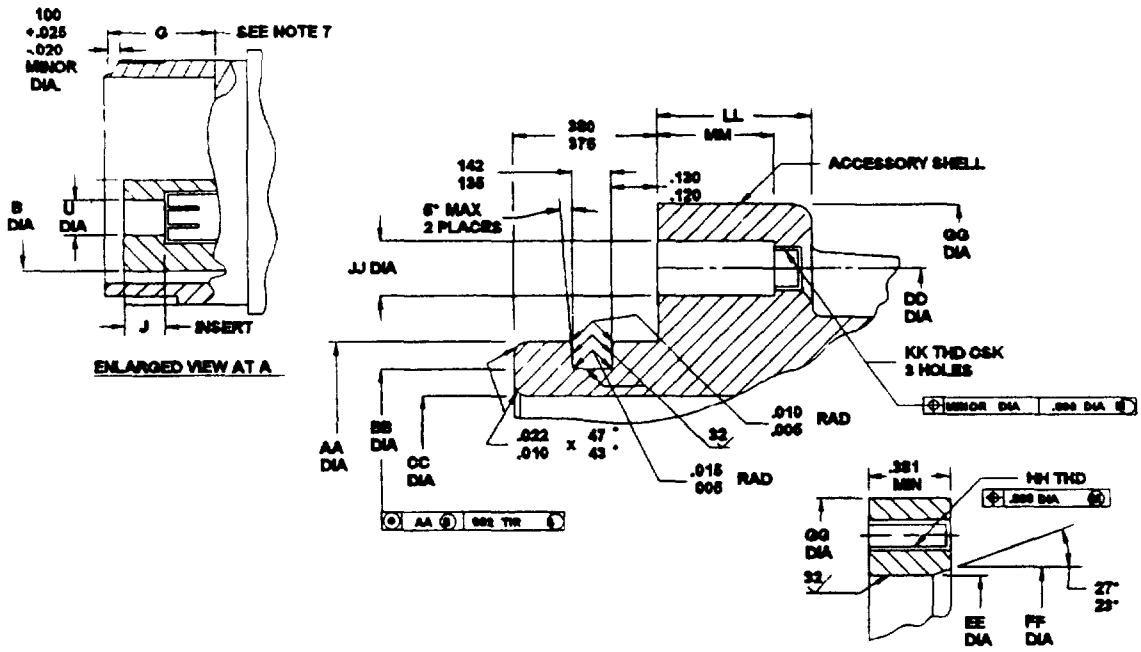

Inches	mm	Inches	mm	Inches	mm	Inches	mm
.001	0.03	.016	0.41	.120	3.05	.380	9.65
.002	0.05	.020	0.51	.130	3.30	.381	9.68
.005	0.13	.022	0.56	.135	3.43	.500	12.70
.006	0.15	.025	0.64	.142	3.61	.531	13.49
.008	0.20	.031	0.79	.164	4.17	.750	19.05
.010	0.25	.047	1.19	.217	5.51	1.125	28.58
.014	0.36	.062	1.57	.322	8.18	2.0	50.80
.015	0.38	.100	2.54	.375	9.53		

NOTES:

1 Dimensions are in inches.
2. Metric equivalents are given for information only.
3 Unless otherwise specified, tolerance is ±.016 (0.41 mm).
4 Mates with receptacles shown on MS90558.
5. Inserts and contacts are removable.
6 Normal key position. For alternate key position, see figure 2.
7. G dimension from the front of the shell to the shoulder in the shell
8 This depth is the point at which the square-ended gauge pin, of the same basic diameter as the mating pin, first engages the spring of the socket contact.

FIGURE 1. Dimensions and configurations - Continued

TABLE I. Plug dimensions.

Shell size	M thread	S max	R THD class 2 left hand	DD dia basic	GG dia	HH thread class 2B	KK thread Class 2B	KK thread Modified minor dia	JJ dia	EE dia	FF dia
28	.164-32UNC	1.817	1.8750-16UN	2.104	2.439 2.428	.164-32UNC	.164-32UNC	.143/.137	.198 .187	1.693 1.687	1.776 1.765
32	.164-32UNC	1.817	1.8750-16UN	2.354	2.689 2.678	.164-32UNC	.164-32UNC	.143/.137	.198 .187	1.943 1.937	2.026 2.015
44	.250-28UNF	1.943	1.3125-16UNS	3.156	3.667 3.646	.250-28UNF	164-32UNF	.229/.223	.286 .275	2.693 2.687	2.776 2.765
48	.250-28UNF	2.130	2.7500-16UN	3.406	3.917 3.896	.250-28UNF	.164-32UNF	.229/.223	.286 .275	2.943 2.937	3.026 3.015
52	.250-28UNF	2.193	3.0000-16UN	3.656	4.167 4.146	250-28UNF	.164-32UNF	.229/.223	.286 .275	3.193 3.187	3.276 3.265

Shell size	B dia max	G ±.005	C maximum Phase Neutral	C maximum Ground	Packing preformed	Hex socket head size	AA dia	BB dia	CC dia min	LL	MM
28	1.281	1.514	.913	.913	MS29513-128	9/64	1.685 1.674	1.539 1.531	1.405	.417 .406	.338 .322
32	1.562	1.514	.913	.913	MS29513-132	9/64	1.935 1.924	1.789 1.781	1.655	.417 .406	.338 .322
44	2.239	1.733	1.138	.663	MS29513-144	3/16	2.685 2.674	2.539 2.531	2.405	.605 .594	.526 .510
48	2.494	1.733	1.156	.663	MS29513-148	3/16	2.935 2.924	2.789 2.781	2.655	.605 .594	.526 .510
52	2.744	1.733	1.156	.663	MS29513-151	3/16	3.185 3.174	3.039 3.031	2.905	.605 .594	.526 .510

Inches	mm	Inches	mm	Inches	mm	Inches	mm	Inches	mm
.005	0.13	1.138	28.91	1.935	49.15	2.678	68.02	3.156	80.16
.137	3.48	1.156	29.36	1.937	49.20	2.685	68.20	3.174	80.62
.143	3.63	1.281	32.54	1.938	49.23	2.687	68.25	3.185	80.90
.187	4.75	1.405	35.69	1.943	49.35	2.689	68.30	3.187	80.95
.198	5.03	1.514	38.46	2.015	51.18	2.693	68.40	3.193	81.10
.223	5.66	1.531	38.89	2.026	51.46	2.744	69.70	3.265	82.93
.229	5.82	1.539	39.09	2.104	53.44	2.765	70.23	3.276	83.21
.275	6.99	1.562	39.67	2.125	53.97	2.776	70.51	3.406	86.51
.286	7.26	1.655	42.04	2.188	55.58	2.781	70.64	3.646	92.61
.322	8.18	1.674	42.52	2.239	56.87	2.789	70.84	3.656	92.86
.338	8.59	1.685	42.80	2.354	59.79	2.905	73.79	3.667	93.14
.406	10.31	1.687	42.85	2.405	61.09	2.924	74.27	3.896	98.96
.417	10.59	1.693	43.00	2.428	61.67	2.935	74.55	3.917	99.49
.510	12.95	1.733	44.02	2.439	61.95	2.937	74.60	4.146	105.31
.526	13.36	1.765	44.83	2.494	63.35	2.943	74.75	4.167	105.84
.594	15.09	1.776	45.11	2.531	64.29	3.015	76.58		
.605	15.37	1.781	45.24	2.539	64.49	3.026	76.86		
.663	16.84	1.789	45.44	2.655	67.44	3.031	76.99		
.913	23.19	1.924	48.87	2.674	67.92	3.039	77.19		

TABLE II. "U" diameter by contact size.

Contact size	"U" diameter (metric equivalent in parentheses)
4/0	.510/.515 (12.95/13.08)
2/0	.416/.421 (10.57/10.69)
1/0	.367/.372 (9.32/9.45)
4	.235/.240 (5.97/6.10)
6	.188/.193 (4.27/4.90)

TABLE III. Accessory interface dimensions.

Size	Arrangement no.	E cable range	K approx free length	H +.001 -.010	L max free length	N dia +.011 -.020	F +.011 -.005	YY dia +.010 -.006	ZZ ±.035 free length	A thread class 2A	D dia +.005 -.010	J +.020 -.010 Phase & neutral	J +.020 -.010 Ground
28	-02, -04	.844/ .719	6.688										
	-03, -05, -06	.969/ .844	7.188	1.750	8.156	2.000	2.448	1.692	.562	2.0000-.1428P-2857L	1.536	.523	.523
	-07, -12	1.047/ .922	7.188										
	-13	1.130/1.005	7.188										
32	-02, -04	.969/ .844	7.188										
	-03, -05, -12	1.130/1.005	7.188										
	-06	1.047/ .992	7.188	1.750	8.156	2.000	2.448	1.942	.562	2.250-.1428P-.2857L	1.786	.523	.523
	-07	1.259/1.135	8.188										
	-13	1.342/1.217	8.688										
44	-02, -04	1.312/1.187	10.688										
	-03, -05	1.438/1.313	9.688										
	-06	1.375/1.250	9.688	2.250	10.125	2.500	2.854	2.692	.672	3.000-.1428P-.2857L	2.545	.742	.273
	-12	1.516/1.391	10.688										
	-13	1.672/1.547	12.688										
	-51	1.734/1.609	11.688										
48	-13	2.000/1.867	14.188	2.750	10.688	2.953	2.854	2.911	.672	3.250-.1428P-.2857L	2.755	.742	.273
52	-02	1.703/1.558	13.688										
	-06	1.797/1.652	13.688	2.875	11.062	3.250	2.854	3.161	.672	3.500- 1428P-.2857L	3.005	.742	.273
	-12	2.328/2.183	17.188										
	-13	2.453/2.308	18.188										

1/ Arrangements 44-52 and 44-56 are for stub cable applications only; they are not to be used in a cable assembly

2/ Arrangement 44-56 to include 4 each MS3348-1-6L contact bushings.

Inches	mm	Inches	mm	Inches	mm	Inches	mm	Inches	mm
.001	0.03	1.130	28.70	1.609	40.87	2.453	62.31	8.688	220.68
.005	0.13	1.135	28.83	1.672	42.47	2.545	64.64	9.688	246.08
.010	0.25	1.187	30.15	1.692	42.98	2.692	68.38	10.125	257.18
.011	0.28	1.217	30.91	1.703	43.26	2.750	69.85	10.688	271.48
.020	0.51	1.250	31.75	1.734	44.04	2.755	69.98	11.062	280.97
.035	0.89	1.259	31.98	1.750	44.45	2.854	72.49	12.688	322.28
.273	6.93	1.312	33.32	1.786	45.36	2.875	73.02	13.688	347.68
.523	13.28	1.313	33.35	1.797	45.64	2.911	73.94	14.188	360.38
.562	14.27	1.342	34.09	1.867	47.42	2.953	75.01	17.188	436.58
.672	17.07	1.375	34.93	1.942	49.33	3.005	76.33	18.188	461.98
.719	13.36	1.391	35.33	2.000	50.80	3.161	80.29		
.742	18.85	1.438	36.53	2.183	55.45	3.250	82.55		
.844	15.37	1.516	38.51	2.250	57.15	6.688	169.88		
922	18.26	1.536	39.01	2 308	58.62	7.188	182.58		
1.005	25.53	1.547	39.29	2.328	59.13	8.156	207.16		
1 047	26.59	1.558	39.57	2.448	62.18	8.188	207.98		

TABLE IV. Insert arrangements, crimp bushings, and contacts.

Insert arrangement	Contacts 1/		Cable conductors 1/		Contact bushing required	
	Quantity	Size	Quantity	Size	Quantity	PIN MS3348-
28-02	2	6	2	8	2	6-8L
28-04	2 1	6 6 (G)	2 2	8 10 (G)	2 ---	6-8L ---
28-06	3 1	6 4 (G)	3 3	8 12 (G)	3 1	6-8L 4-8L
28-07	3 1	6 4 (G)	3 3	6 10 (G)	--- 1	--- 4-5L
28-12	4 1	6 6 (G)	4 4	8 12 (G)	4 ---	6-8L ---
32-02	2	4	2	6	2	4-6L
32-04	2 2	4 6 (G)	2 2	6 10 (G)	2 2	4-6L 6-10L
32-05	2 2	4 6 (G)	2 2	4 8 (G)	--- 2	--- 6-8L
32-06	3 1	4 4 (G)	3 3	6 12 (G)	3 1	4-6L 4-8L
32-12	4 1	4 6 (G)	4 4	6 12 (G)	4 ---	4-6L ---
44-02	2	1/0	2	2	2	1-2L
44-04	2 2	1/0 4 (G)	2 2	2 6 (G)	2 2	1-2L 4-6L
44-05	2 2	1/0 4 (G)	2 2	1 5 (G)	--- 2	--- 4-5L
44-06	3 3	1/0 6 (G)	3 3	2 8 (G)	3 3	1-2L 6-8L
44-12	4 4	1/0 6 (G)	4 4	2 9 (G)	4 4	1-2L 6-9L
44-13	4 4	1/0 6 (G)	4 4	1 8 (G)	--- 4	--- 6-8L
44-52	3 1	1/0 1/0 (G)	3 1	2 2 (G)	3 1	1-2L 1-2L
44-56	3 1	1/0 1/0 (G)	3 1	6 6 (G)	3 1	1-6L 1-6L
52-02	2	4/0	2	2/0	2	4/0-2/0L
52-06	3 3	4/0 4 (G)	3 3	2/0 5 (G)	3 3	4/0-2/0L 4-5L

1/ (G) designates grounding.

REQUIREMENTS

Dimensions and configurations: See figure 1 and tables I, II, and III.

Mating. See MS90558 for mating receptacles.

Inserts and contacts: Removable.

For final installation: Contacts will be assembled in all insert holes.

Shell and nut finish: C (conductive) or N (nonconductive).

Normal keyway position: See figure 1.

Alternate keyway position: See figure 2.

Insert arrangements: See MS90565, MS90567, MS14054, MS14055, and MS14057.

Cover: In accordance with MS90563. Cover shall be attached to cap screw on body.

Crimp bushings: Shall be supplied with the contacts in accordance with MS3348 and table IV herein.

Cable sealing gland: In accordance with MS23747. Shall be supplied with each connector.

Cable grip: In accordance with MS90561. Shall be supplied with each connector.

Part or Identifying Number (PIN): The PIN shall include the shell finish, shell size, shell key alternate position, insert arrangement number, style (S), and insert alternate position.

EXAMPLE:

MS90557	N	32	N	08	S	W
MS number	Shell finish (C or N)	Shell size	Shell key position (see reqt)	Insert arrangement number (2 digits)	Style S	Insert alternate position (no lettter required for normal position)

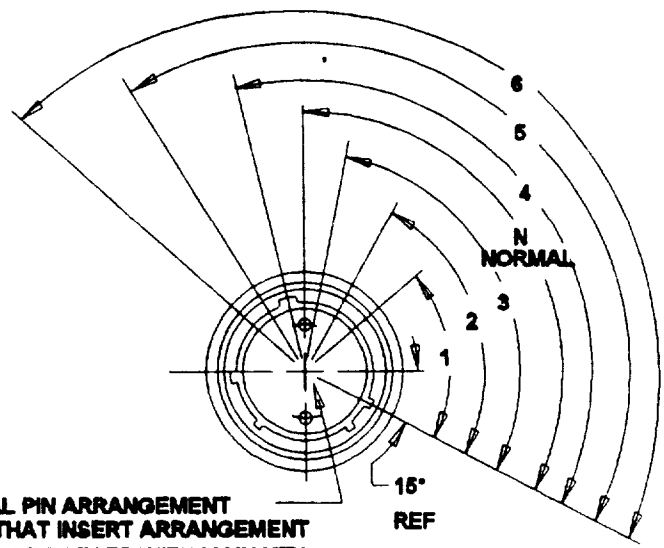

TYPICAL PIN ARRANGEMENT
NOTE THAT INSERT ARRANGEMENT
DOSE NOT ROTATE WITH MAIN KEY

FIGURE 2. Alternate key position

Finish N (nongrounding assemblies)

Shell size	Shell main key positions 2 wire, 28 V dc
28	N (105°)
32	N (105°)
44	N (105°)
48	N (105°)
52	N (105°)

Finish C (grounding assemblies)

Shell size	Shell main key position						
	60 Hz and 400 Hz (see note 1)						
	1φ			3φ			3φ (see note 2)
	2 wire		3 wire	4 wire			3 wire
	120 V	240 V	120/240 V	120/208 V	240/416 V	277/480 V	450/480 V
28	4 (120°)	5 (135°)	4 (120°)	4 (120°)	5 (135°)	6 (150°)	---
32	4 (120°)	5 (135°)	4 (120°)	4 (120°)	5 (135°)	6 (150°)	---
44	4 (120°)	---	4 (120°)	4 (120°)	5 (135°)	6 (150°)	1 (60°)
48	---	---	4 (120°)	4 (120°)	5 (135°)	6 (150°)	---
52	---	---	4 (120°)	4 (120°)	5 (135°)	6 (150°)	---

NOTES:
1. Discrimination of 60 Hz and 400 Hz assemblies is accomplished by alternate positioning of inserts. See applicable insert drawing for keying.
2. For Navy ground support equipmeny use only.
3. Shell main key positions 2 and 3 are not used.

FIGURE 2. Alternate key position - Continued.

Revision letters are not used to denote changes due to the extensiveness of the changes.

CONCLUDING MATERIAL

Custodians.
Army - CR
Navy - EC
Air Force - 85

Review activities:
Army - AT, AV, ME, MI
Navy - AS, CG, MC, OS, SH
Air Force - 11, 13, 14, 17, 19, 99

Preparing activity:
DLA - ES

(Project 5935-3996-02)