FED SUP CLASS
5935

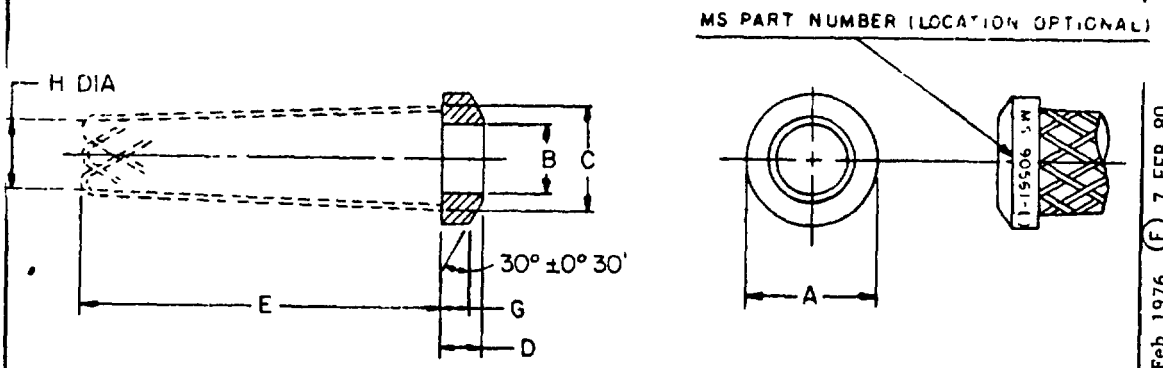

MS Part number	Arrangement number	A DIA +.000 -.010	B DIA +.020 - 000	C DIA Max	D ±.015	E Approx	G ±.005	H DIA Cable range Max	H DIA Cable range Min
90561-1	28-03,-05,-06 32-02,32-04	1 797	.969	1.506	.450	8 000	.250	.969	832
-2	28-13,32-03 32-05,32-12	1.797	1.145	1.506	.413	8 000	.250	1.145	1.003
-3	32-07	1.797	1.260	1.506	.368	9.000	.250	1.260	1.055
-4	28-02,28-04	1.797	.844	1.506	.485	7.500	.250	.844	.688
-5	44-02,44-04	2.235	1.312	1.944	.477	11.500	.250	1.312	1 156
-6	44-06	2.235	1.375	1.944	.459	10.500	.250	1.375	1.219
-7	48-13	2.672	2.062	2.418	.500	15.000	.369	2.062	1 867
-8	52-02	2.922	1.703	2.672	.680	14.500	.369	1.703	1.414
-9	52-06	2.922	1.797	2.672	.653	14.500	.369	1.797	1.508
-10	Canceled	NO SUPERSEDING DATA							
-11	Canceled	NO SUPERSEDING DATA							
-12	28-07,28-12 32-06	1 797	1.047	1.506	428	8.000	.250	1 047	.891
-13	32-13	1.797	1.342	1.506	366	9.500	.250	1.342	1.185
-14	44-03,44-05	2.235	1.438	1.944	.441	10.500	.250	1.438	1.282
-15	44-12	2 235	1.516	1.944	.419	11.500	.250	1.516	1.360
-16	44-13	2.235	1.688	1.944	375	13.500	.250	1 688	1.531
-17	52-12	2.922	2.328	2.672	.497	18.000	.369	2 328	2.039
-18	52-13	2.922	2.500	2.672	.453	19.000	.369	2.500	2.211
(E) -19	44-51	2.235	1 750	1.955	325	12.500	.250	1 750	1.550
-20	44-52	2.235	1.578	1.944	.406	12.000	.250	1.578	1.375
-21	44-56	2.235	1.160	1.944	.340	8.000	.250	1.160	1.010

NOTES
1 Material shall be corrosion resisting steel, type 18-8 or equivalent
2. Dimensions are in inches, unless otherwise specified, tolerance is ± 010
3 For design feature purposes, this standard takes precedence over procurement documents
4 Reference documents shall be of the issue in effect on date of invitation for bid
5 Not required to meet the permeability requirements of MIL-C-22992 (E) Denotes changes

P A Navy - EC	International interest	TITLE GRIP, CABLE, WOVEN, STRAIN RELIEF, AXIAL	MILITARY STANDARD
Other Cust Army-CR AF-11			MS90561
Procurement Specification MIL-C-22992		SUPERSEDES	SHEET 1 OF 1

DD FORM 1 SEP 63 672 (Coordinated) PREVIOUS EDITIONS OF THIS FORM ARE OBSOLETE 5935-3064-8

User activities Army - AT, AV, ME Navy - MC, CG, OS Air Force - 13, 19

Reviewer activities Army - MI Navy - AS Air Force - 17, 80, 85 DSA-ES

This military standard is approved for use by all Departments and Agencies of the Department of Defense. Selection for all new engineering and design applications and for repetitive use shall be made from this document

APPROVED 1 Jun 66 REVISED (A) 2 Feb 72 (B) 29 Jan 73 (C) 28 Aug 1974 (D) 24 Feb 1976 (E) 7 FEB 80