This military standard is approved for use by all Departments and Agencies of the Department of Defense. Selection for all new engineering and design applications and for repetitive use shall be made from this document when applicable.

Review activities: Army - EL, MI, MU
Navy - EC, AS
Air Force - 17, 85, 99
DSA-ES

User activities: Army - AT, AV, MI
Navy - MC, CG, OS
Air Force - 13, 19

P.A NAVY-EC
Other Cust ARMY-EL
AF-11

Procurement Specification MIL-C-22992

International Interest

SUPERSEDES:

TITLE COVER, ELECTRICAL CONNECTOR, PLUG, CLASS L

MILITARY STANDARD

MS90564

PAGE 1 OF 2

(E) ENTIRE STANDARD REVISED

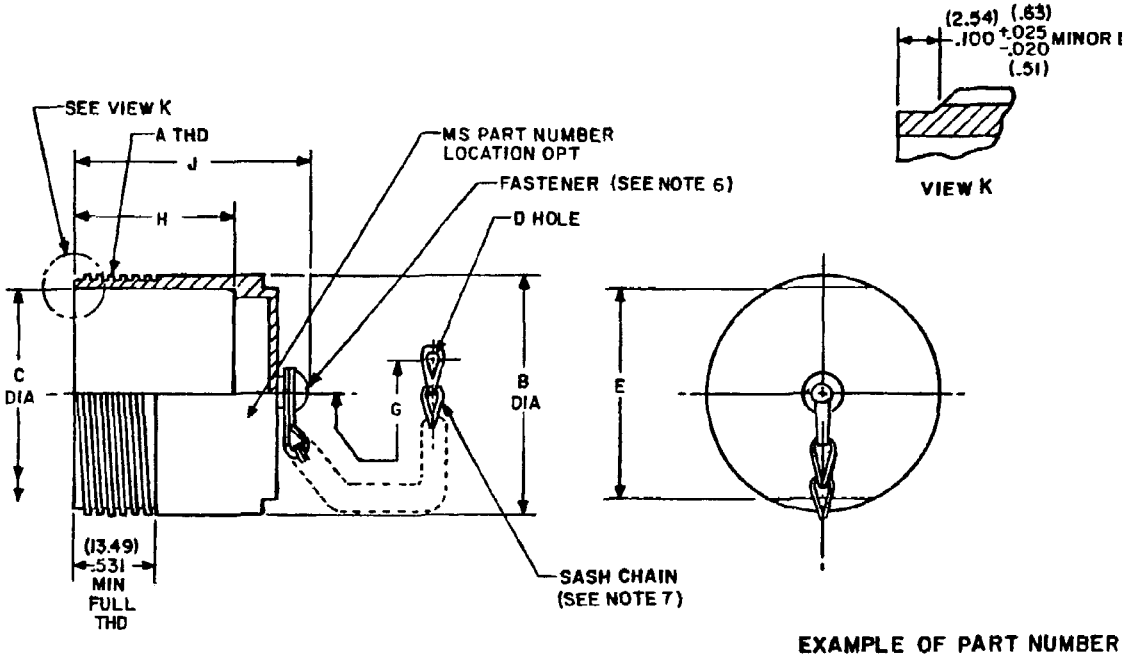

EXAMPLE OF PART NUMBER

MS90564 -1 N

MS NUMBER · DASH NUMBER · FINISH (SEE NOTE 5)

.SUPERSESSION DATA:
MS part number MS90564-3 is superseded by MS part number MS90564-3C.
MS part number MS90564-4 is superseded by MS part number MS90564-4C.

FED. SUP CLASS 5935

APPROVED 1 JUN 66 REVISED (E) 25 MAR 77

DD FORM 1 MAY 73 672 (Coordinated) PREVIOUS EDITIONS OF THIS FORM ARE OBSOLETE.

5935-2064-2

This military standard is approved for use by all Departments and Agencies of the Department of Defense. Selection for all new engineering and design applications and for repetitive use shall be made from this document when applicable.

Review activities: Army - Navy - Air Force -

User activities: Army - Navy - Air Force

MS Part number	Shell size	A Thread DS-2A	B Dia. Max.	C Dia. Min.	D Dia. Hole See note 8: For receptacle with coupling ring MS90558	D Dia. Hole See note 8: For plug with coupling ring MS90556	E Across flats	G See note 7	H Min.	J Max.
MS90564-1 ( )	28	2.000-.1428P-.2857L	2.000 (50.80)	1.692 (42.98)	.164	.164	1.750 (44.45)	7.500 (190.50)	1.562 (39.67)	2.266 (57.56)
-3 ( )	32	2.250-.1428P-.2857L	2.250 (57.15)	1.942 (49.33)	.190		2.000 (50.80)	6.000 (152.40)		
-4 ( )						.164		7.500 (190.50)	1.562 (39.67)	2.266 (57.56)
-7 ( )	44	3.000-.1428P-.2857L	3.000 (76.20)	2.692 (68.38)	.250	.250	2.750 (69.85)	8.500 (215.90)	1.781 (45.24)	2.484 (63.09)
-9 ( )	48	3.250-.1428P-.2857L	3.250 (82.55)	2.911 (73.94)	.250	.250	3.000 (76.20)	8.500 (215.90)	1.781 (45.24)	2.484 (63.09)
-11 ( )	52	3.500-.1428P-.2857L	3.500 (88.90)	3.161 (80.29)	.250	.250	3.250 (82.55)	8.500 (215.90)	1.781 (45.24)	2.484 (63.09)

NOTES:
1. Dimensions are in inches.
2. Metric equivalents are given for general information only and are based upon 1.00 inch = 25.4 mm.
3. Metric equivalents are in parentheses.
4. Unless otherwise specified, tolerance is ±.010 (.25 mm).
5. Finish shall be designated by the letter C (conductive) or N (non-conductive).
6. Chain shall move freely on protective cap after assembly.
7. Chain shall be passivated stainless steel in accordance with type II, class 3, trade number 8 of RR-C-271 for -1, -3 and -4, and type II, class 3, trade number 35 of RR-C-271 for -7, -9 and -11. Chain shall be within one link of length specified.
8. D clearance to accommodate screw size indicated. Clearance hole may be rounded and enlarged by the use of a drift pin.
9. Optional design chain: Chain may be reversed and a larger link provided as a reverse link to provide the necessary D clearance hole.
10. For design feature purposes, this standard takes precedence over procurement documents referenced herein.
11. Referenced documents shall be of the issue in effect on date of invitation for bid.

APPROVED 1 JUN 66 REVISED (E) FOR CHANGES SEE PAGES 1&2

FED. SUP CLASS 5935

P.A. NAVY-EC Other Cust ARMY-EL AF-11

Procurement Specification MIL-C-22992

International Interest

TITLE COVER, ELECTRICAL CONNECTOR, PLUG, CLASS L

SUPERSEDES:

MILITARY STANDARD MS 90564

DD FORM 1 MAY 73 672 (Coordinated) PREVIOUS EDITIONS OF THIS FORM ARE OBSOLETE.