FED. SUP CLASS
5935

FRONT FACE OF PIN INSERT SHOWN (SOCKET INSERT OPPOSITE), UNLESS OTHERWISE SPECIFIED.

28 VOLT DC TWO WIRE -02 AND -03 INSERT ARRANGEMENTS

QTY	CONTACT	SIZE	SOCKET M39029	PIN M39029
1	A	4	49-331	48-320
1	N	4N	49-331 See 9 Note	48-321

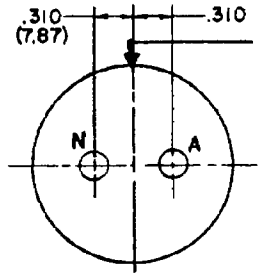

SERVICE D

-02-CABLE IPCEA 2 NO 6 CONDUCTOR ROUND, TYPE W
-03-CABLE-CO-02-HDF (2/4) 1100 PER-MIL-C-3432
32-02 SHALL BE MARKED ON 32-03 INSERT (SEE NOTE 8)

AC SINGLE PHASE TWO WIRE GROUNDING -04 AND -05 INSERT ARRANGEMENTS

QTY	CONTACT	SIZE	SOCKET M39029	PIN M39029
1	A	4	49-331	48-320
1	N	4N	49-331 See 9 Note	48-321
2	G1, G2	6N	49-329 See 9 Note	48-318

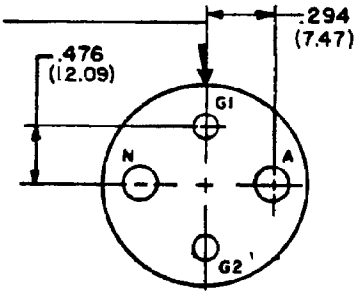

SERVICE D

-04-CABLE IPCEA 2-NO 6 CONDUCTOR ROUND, TYPE G
-05-CABLE-CO-02-HDF (2/4-2/8R) 1100 PER MIL-C-3432
MARK 32-04 ON 32-05 INSERT (SEE NOTE 8)

AC SINGLE PHASE THREE WIRE GROUNDING -06 AND -07 INSERT ARRANGEMENTS

QTY	CONTACT	SIZE	SOCKET M39029	PIN M39029
2	A,B	4	49-331	48-320
2	N,G	4N	49-331 See 9 Note	48-321

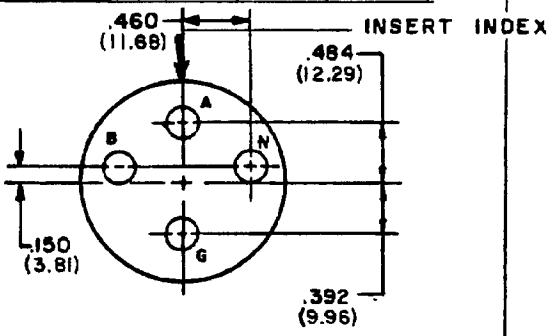

SERVICE D

-06-CABLE IPCEA 3-NO 6 CONDUCTOR ROUND TYPE G
-07-CABLE-CO-03-HDF (3/4-3/10R) 1210 PER MIL-C-3432
MARK 32-06 ON 32-07 INSERT (SEE NOTE 8)

AC THREE PHASE FOUR WIRE GROUNDING -12 AND -13 INSERT ARRANGEMENTS

QTY	CONTACT	SIZE	SOCKET M39029	PIN M39029
3	A,B,C	4	49-331	48-320
1	N	4N	49-331 See 9 Note	48-321
1	G	6N	49-329 See 9 Note	48-318

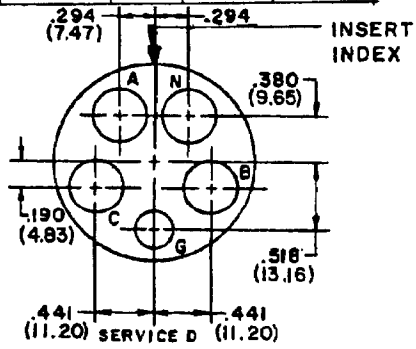

SERVICE D

-12-CABLE IPCEA 4-NO 6 CONDUCTOR ROUND, TYPE G
-13-CABLE-CO-04-HDF (4/4-4/12R) 1290 PER MIL-C-3432
MARK 32-12 ON 32-13 INSERT (SEE NOTE 8)

(G) denotes changes

P.A NAVY - EC Other Cust ARMY - CR AF - 11	International Interest	TITLE INSERT ARRANGEMENTS, ELECTRICAL CONNECTOR SIZE 32, CLASS L, 60 AMPS	MILITARY STANDARD MS 90565
Procurement Specification MIL-C-22992		SUPERSEDES:	PAGE 1 OF 3

DD FORM 1 MAY 73 672 (Coordinated) PREVIOUS EDITIONS OF THIS FORM ARE OBSOLETE.

5935-3333-4

APPROVED 1 Jun 1966 REVISED (E) 6 May 75 (F) 7 FEB 80 (G) 20 December 1982

User activities: Army - AT, AV, ME Navy - MC, CG, SH, OS Air Force - 19

Review activities: Army - CR, MI Navy - AS, YD Air Force - 17, 85, 11 DLA-ES

This military standard is approved for use by all Departments and Agencies of the Department of Defense. Selection for all new engineering and design applications and for repetitive use shall be made from this document when applicable.

INSERT ROTATION (DEGREES FROM NORMAL)				
ARRANGEMENT NUMBER	NORMAL DC or 60 Hz (SEE FIG 1)	ALTERNATE (SEE FIG 1) 400 Hz		
		W	X	Y
32-02 32-03	0°	---	---	---
32-04 32-05	0°	---	90°	---
32-06 32-07	0°	---	---	---
32-12 32-13	0°	---	---	180°

NOTES:
1. Dimensions are in inches.
2. Metric equivalents are given for general information only and are based upon 1.00 inch = 25.4 mm.
3. Metric equivalents are in parentheses.
4. Unless otherwise specified, tolerance is ±.002 (.05 mm).
5. For design feature purposes, this standard takes precedence over procurement documents referenced herein.
6. Referenced documents shall be of the issue in effect on date of invitation for bid.
7. Unless otherwise specified, pin insert pattern shown. Socket inserts are the reverse.
8. *Trademark and 32-( ) shall appear in available space.* Contact identifying letter shall be located so as to identify relative contact.
9. Only the pin contact is lengthened and has the N (neutral) designation. The mating socket contact is the same as the power contact.

REQUIREMENTS:
1. Neutral pin (N) is not connected to shell.
2. Grounding pin (G) is connected to shell.
3. Applicable MS3348 crimp bushings shall be supplied with the contacts for insert arrangements as specified:

INSERT ARRANGEMENT	CONTACTS		CABLE CONDUCTORS MS90556 & MS90557 1/		CONTACT BUSHINGS REQUIRED	
	QTY	SIZE	QTY	SIZE	QTY	P/N MS3348-
32-02	2	4	2	6	2	4-6L
32-04	2 2	4 6	2 2	6 10(G)	2 2	4-6L 6-10L
32-05	2 2	4 6	2 2	4 8(G)	- 2	- 6-8L
32-06	3 1	4 4	3 3	6 12(G)	3 1	4-6L 4-8L
32-12	4 1	4 6	4 4	6 12(G)	4 -	4-6L -

1/ (G) DESIGNATES GROUNDING.

APPROVED 1 Jun 1966 REVISED (G) FOR CHANGES SEE PAGES 1,2 AND 3

User activities: Army - AT, AV, ME Navy - MC, CG, SH, OS Air Force - 19
Review activities: Army - CR, MI Navy - AS, YD Air Force - 17, 85, 11 DLA-ES
This military standard is approved for use by all Departments and Agencies of the Department of Defense. Selection for all new engineering and design applications and for repetitive use shall be made from this document when applicable.

FED. SUP CLASS
5935

INSERT IN NORMAL POSITION
(60 Hz POWER ONLY)

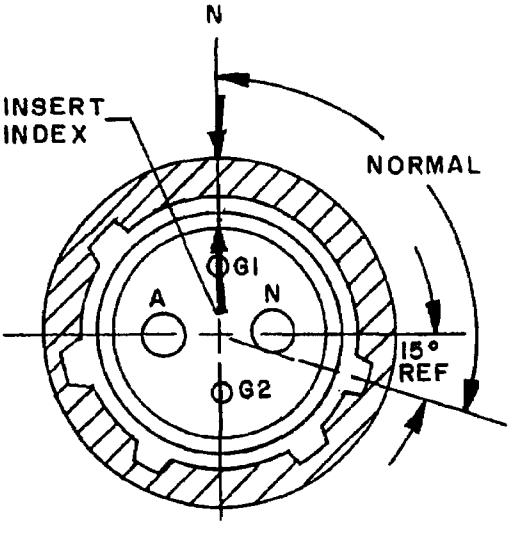

(REF. MS90555******S)
(REF. MS90557******S)
SOCKET CONTACT PATTERN
FRONT FACE OF SOCKET INSERT SHOWN

INSERT IN ALTERNATE POSITION
(400 Hz POWER ONLY)

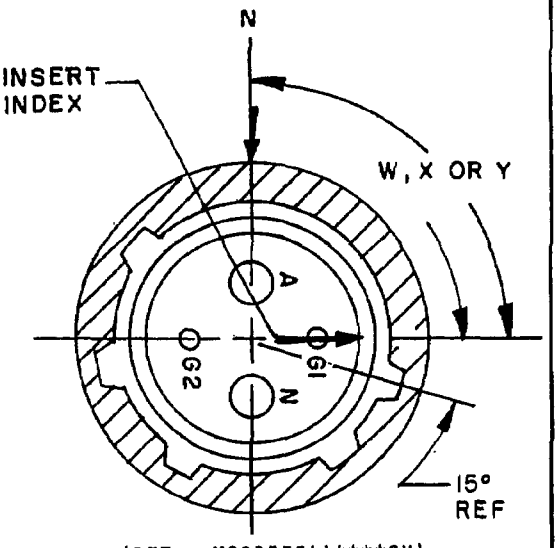

(REF. MS90555******SX)
(REF. MS90557******SX)
SOCKET CONTACT PATTERN
FRONT FACE OF SOCKET INSERT SHOWN

INSERT IN NORMAL POSITION
(60 Hz POWER ONLY)

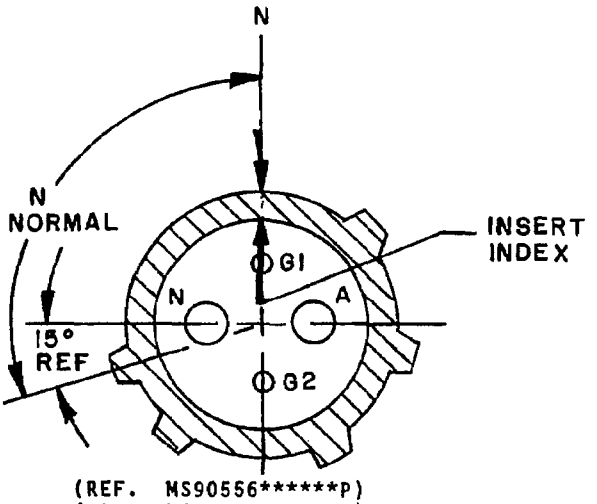

(REF. MS90556******p)
(REF. MS90558******p)
SOCKET CONTACT PATTERN
FRONT FACE OF PIN INSERT SHOWN

INSERT IN ALTERNATE POSITION
(400 Hz POWER ONLY)

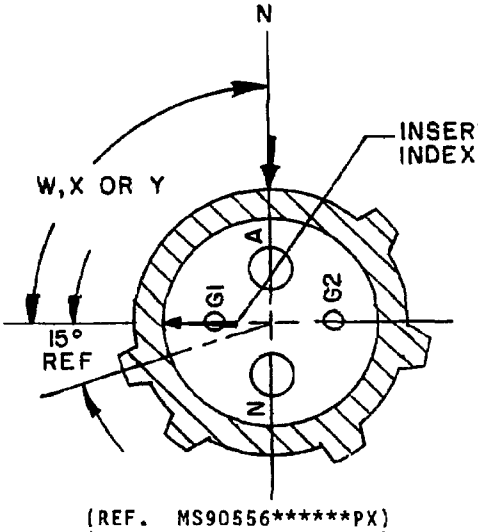

(REF. MS90556******PX)
(REF. MS90558******PX)
SOCKET CONTACT PATTERN
FRONT FACE OF PIN INSERT SHOWN

(G) FIGURE 1.

P.A NAVY - EC Other Cust ARMY - CR AF - 85	International Interest	TITLE INSERT ARRANGEMENTS, ELECTRICAL CONNECTOR, SIZE 32, CLASS L, 60 AMPS	MILITARY STANDARD MS90565
Procurement Specification MIL-C-22992		SUPERSEDES:	PAGE 3 OF 3

DD FORM 1 MAY 73 672 (Coordinated) PREVIOUS EDITIONS OF THIS FORM ARE OBSOLETE. 5935-3333-4

User activities: Army - AT, AV, ME; Navy - MC, CG, OS, SH; Air Force - 19

Review activities: Army - CR, MI; Navy - AS, YD; Air Force - 17, 80; DLA-ES

This military standard is approved for use by all Departments and Agencies of the Department of Defense. Selection for all new engineering and design applications and for repetitive use shall be made from this document when applicable.

APPROVED 1 JUN 1966 REVISED (G) FOR CHANGES SEE PAGES 1,2 AND 3