FED. SUP CLASS
5935

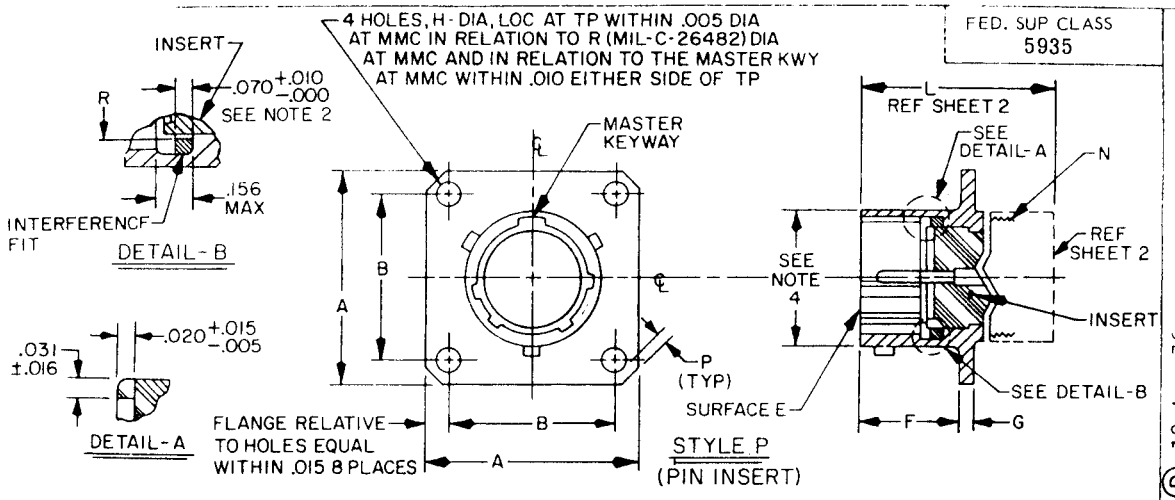


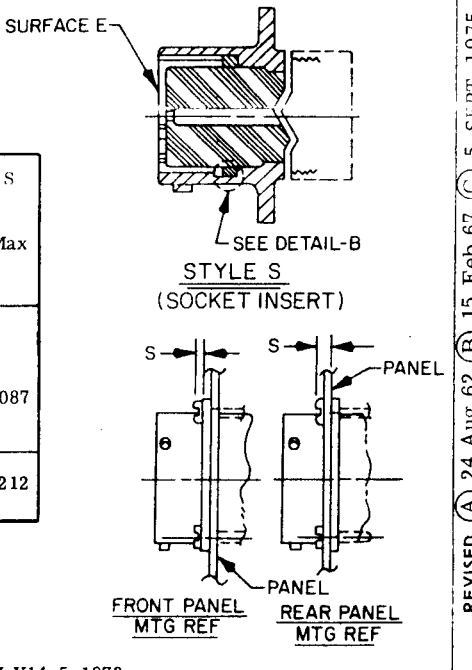


Classes E, F, J and P receptacles

| Size | A Max length side | B (TP) Mtg holes | F +.031 -.000 Mtg flange location | G ±.016 Thk mtg flange | H +.005 Dia mtg holes | N UNEF-2A accessory thread | P Min edge dist | R Max ID gasket | S Max |
|---|---|---|---|---|---|---|---|---|---|
| 8 | .828 | .594 | | | | .4375-28 | | .329 | |
| 10 | .954 | .719 | | | | .5625-24 | | .457 | |
| 12 | 1.047 | .812 | | | | .6875-24 | | .564 | |
| 14 | 1.141 | .906 | .431 | .062 | .120 | .8125-20 | .035 | .689 | .087 |
| 16 | 1.234 | .969 | | | | .9375-20 | | .814 | |
| 18 | 1.328 | 1.062 | | | | 1.0625-18 | | .907 | |
| 20 | 1.453 | 1.156 | .556 | .094 | | 1.1875-18 | | 1.039 | |
| 22 | 1.578 | 1.250 | | | | 1.3125-18 | .050 | 1.164 | .212 |
| 24 | 1.703 | 1.375 | .589 | | .147 | 1.4375-18 | | 1.289 | |

NOTES:
1. Dimensions are in inches.
2. Packing material shall meet the requirements of MIL-STD-417.
3. True position (TP) tolerances specified are in accordance with ANSI Y14.5-1973.
4. Intermateability dimensions shall be in accordance with MIL-C-26482.
5. For insert arrangements see MIL-STD-1669.
6. For design feature purposes, this standard takes precedence over procurement documents referenced herein.
7. Referenced documents shall be of the issue in effect on date of invitations for bid.
8. Example of part number:

MS3110 F 12 - 3 P W

- MS3110: MS number
- F: Class
- 12: Size
- 3: Insert arrangement
- P: Contact style
- W: Alternate insert position

9. NOT FOR AIR FORCE USE. USE MS3470.

(D) FOR CHANGES SEE SHEET 2

| P.A Navy - AS | International interest | TITLE CONNECTORS, RECEPTACLE, ELECTRIC, SERIES 1, SOLDER TYPE, WALL MOUNTING, FLANGE, BAYONET COUPLING | MILITARY STANDARD |
|---|---|---|---|
| Other Cust Army - EL AF - 85 | | | MS 3110 |
| Procurement Specification MIL-C-26482 | | SUPERSEDES: | SHEET 1 OF 2 |

DD FORM 1 SEP 63 672 (Coordinated) PREVIOUS EDITIONS OF THIS FORM ARE OBSOLETE 5935-2070-1

APPROVED 14 May 59 REVISED (A) 24 Aug 62 (B) 15 Feb 67 (C) 5 SEPT 1975 (D) 19 Aug 76

User activities: Army AV Navy Air Force

Reviewer activities: Army EL, MI, MU Navy EC, SH Air Force 11, 17

This military standard is approved for use by all Departments and Agencies of the Department of Defense. Selection for all new engineering and design applications and for repetitive use shall be made from this document.

This military standard is approved for use by all Departments and Agencies of the Department of Defense. Selection for all new engineering and design applications and for repetitive use [illegible] document.

Reviewer activities: Army EL, MI, MU
Navy EC, SH
Air Force 11, 17

User activities: Army AV
Navy
Air Force

P.A. Navy - AS

Army - EL
AF - [illegible]

MIL-C-26482

DD FORM 1 SEP 63 672

TITLE
CONNECTORS, RECEPTACLE, ELECTRIC, SERIES 1, SOLDER TYPE, WALL MOUNTING, FLANGE, BAYONET COUPLING

SUPERSEDES:

MILITARY STANDARD

MS 3110

SHEET 2 OF 2

5935-2070-1

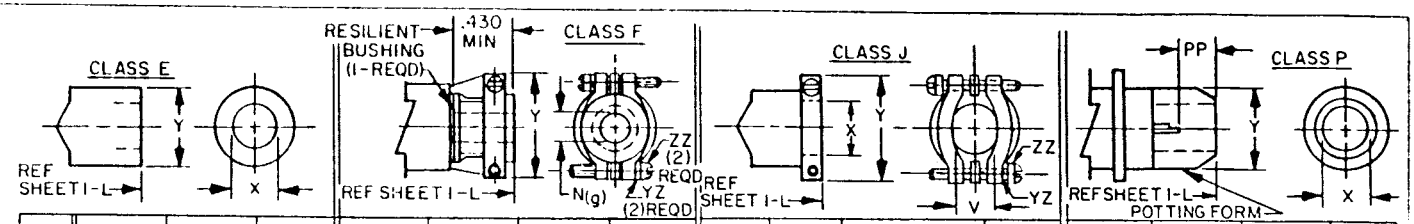


(D)

| Size | L MAX OVER-ALL LENGTH | X DIA MIN ID | Y DIA MAX OD | L MAX OVER-ALL LENGTH | X DIA MIN OPEN | Y MAX | V MAX CLOSED | L MAX OVER-ALL LENGTH | V MAX CLOSED | X ID GLAND SEAL MIN. RANGE CLOSED | X ID GLAND SEAL MIN. RANGE OPEN | Y DIA MAX | L MAX OVER-ALL LENGTH | X DIA MIN | Y DIA MAX | PP MIN |
|---|---|---|---|---|---|---|---|---|---|---|---|---|---|---|---|---|
| 8 | 1.328 | .259 | .608 | [illegible] | .234 | .828 | .137 | 2.271 | .137 | .168 | .230 | .828 | 1.453 | .317 | .608 | .250 |
| 10 | | .359 | .734 | | .297 | .891 | [illegible] | | .187 | .205 | .312 | .891 | | .434 | .734 | |
| 12 | | .469 | .858 | | .422 | 1.016 | .281 | 2.411 | .281 | .338 | .442 | 1.016 | | .548 | .858 | |
| 14 | | .58[illegible] | .984 | | .547 | 1.141 | .325 | 2.5[illegible] | .325 | .416 | .539 | 1.141 | | .673 | .984 | |
| 16 | | .717 | 1.110 | [illegible] | .609 | 1.203 | .356 | [illegible] | .356 | .550 | .616 | 1.203 | | .798 | 1.110 | |
| 18 | | .779 | 1.234 | [illegible] | .734 | 1.469 | .456 | 3.172 | .456 | .600 | .672 | 1.469 | | .899 | 1.234 | |
| 20 | 1.[illegible]31 | .901 | 1.360 | [illegible] | | | .519 | 3.610 | .519 | .635 | .747 | | 1.672 | 1.024 | 1.360 | |
| 22 | | 1.009 | 1.484 | | .922 | 1.656 | | 3.766 | | .670 | .846 | 1.656 | | 1.149 | 1.484 | |
| 24 | [illegible] | 1.123 | 1.610 | [illegible] | .984 | 1.750 | .657 | 3.985 | .657 | .740 | .894 | 1.750 | 1.734 | 1.274 | 1.610 | |

| Size | | N ±.010 FREE DIA | SCREW THREADS | YZ LOCKWASHERS AN935 OR AN936 TYPES |
|---|---|---|---|---|
| 8 | | .125 | 6-32 UNC | AN935 B6L OR [illegible] |
| 10 | | .188 | | AN936-A6B OR [illegible] |
| 12 | | .312 | | |
| 14 | | .375 | | |
| 16 | | .500 | | |
| 18 | | .625 | 8-32 UNC | AN935 B8L OR [illegible] |
| 20 | | .625 | | AN936-A8B OR [illegible] |
| 22 | | .750 | | |
| 24 | | .800 | | |

DIMENSIONS WITH BUSHING REMOVED

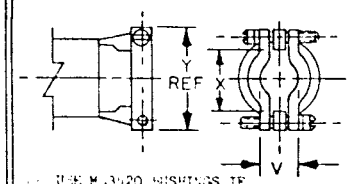


USE MS3420 BUSHINGS IF [illegible] OPENING IS REQUIRED
LOCKWASHERS MAY BE CAPTIVE

APPROVED 14 May 59

REVISED (C) Entire standard revised (D) FOR CHANGES SEE SHEET 2

SEP CLASS 5935