FED. SUP CLASS
5935

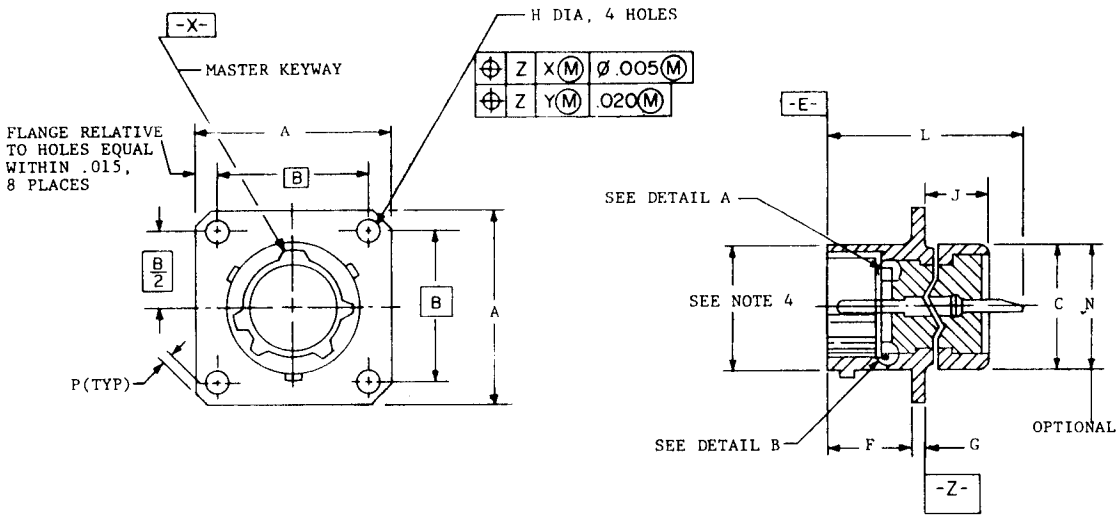

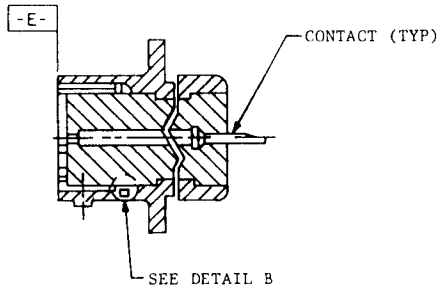

STYLE S (SOCKET INSERT)

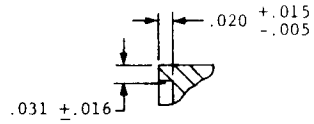

PERIPHERAL SEAL
DETAIL A

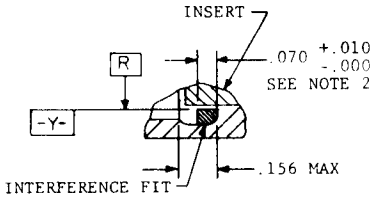

PACKING RING
DETAIL B

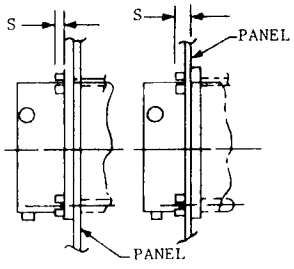

FRONT PANEL MTG REF

REAR PANEL MTG REF

(G) REVISED AND REDRAWN

APPROVED 14 MAY 59 REVISED (E) 30 NOV 70 (F) 5 SEP 75 (G) 30 July 1979

USER SYMBOLS: ARMY - AV, NAVY -, USAF -

REVIEWER SYMBOLS: ARMY - MU, MI, EL; NAVY - SH, EC; USAF - 11, 17

"Review/user information is current as of the date of this document. For future coordination of changes to this document, draft circulation should be based on the information in the current DODISS."

This military standard is approved for use by the Department of Defense. Section 3 of the Department of Defense Standardization Manual, DoD 4120.3-M, authorizes the engineering and design disciplines and for prescriptive use should be made from this document.

P.A. NAVY - AS Other Cust ARMY - EL USAF - 85	TITLE CONNECTORS, RECEPTACLE, ELECTRIC, SERIES 1, BOX MOUNTING, FLANGE, BAYONET COUPLING, SOLDER CONTACT	MILITARY STANDARD MS3112
PROCUREMENT SPECIFICATION MIL-C-26482	SUPERSEDES	SHEET 1 OF 2

DD FORM 1 MAR 72 672-1 (Coordinated) PREVIOUS EDITIONS OF THIS FORM ARE OBSOLETE PROJECT NO. 5935-3089-1 PLATE NO. 23065

FED. SUP CLASS
5935

SIZE	A MAX LENGTH SIDE	B (TP) ℄ - ℄ MTG HOLES	C +.031 -.016 OD	F +.031 -.000 MTG FLANGE LOCATION	G ±.016 THK MTG FLANGE	H ±.005 DIA MTG HOLES	J (G) MAX	L MAX OVERALL LENGTH	N (G) UNEF-2A THREAD OPTIONAL	P MIN EDGE DIST	R MAX PACKING RING	S MAX
8	.828	.594	.438						.4375-28		.329	
10	.954	.719	.562						.5625-24		.457	
12	1.047	.812	.688						.6875-24		.564	
14	1.141	.906	.812	.431	.062	.120	.354	.978	.8125-20	.035	.689	.087
16	1.234	.969	.938						.9375-20		.814	
18	1.328	1.062	1.062						1.0625-18		.907	
20	1.453	1.156	1.188	.556					1.1875-18		1.039	
22	1.578	1.250	1.312		.094		.417	1.196	1.3125-18	.050	1.164	.212
24	1.703	1.375	1.438	.589		.147	.445		1.4375-18		1.289	

NOTES:

1. DIMENSIONS ARE IN INCHES.
2. PACKING MATERIAL, SULPHUR FREE, IN ACCORDANCE WITH MIL-STD-417.
3. TRUE POSITION (TP) TOLERANCES SPECIFIED ARE IN ACCORDANCE WITH ANSI Y14.5-1973.
4. INTERMATEABILITY DIMENSIONS SHALL BE IN ACCORDANCE WITH MIL-C-26482.
5. INSERT ARRANGEMENTS SEE MIL-STD-1669.
6. EXAMPLE OF PART NUMBER.

MS3112 E 12 - 3 P W

BASIC PART NUMBER — CLASS — SIZE — INSERT ARRANGEMENT — CONTACT STYLE (P - PIN, S - SOCKET) — ALTERNATE INSERT POSITION

7. FOR DESIGN FEATURE PURPOSES, THIS STANDARD TAKES PRECEDENCE OVER PROCUREMENT DOCUMENTS REFERENCED HEREIN.
8. REFERENCED DOCUMENTS SHALL BE OF THE ISSUE IN EFFECT ON DATE OF INVITATIONS FOR BID
9. NOT FOR AIR FORCE USE, USE MS3470.

APPROVED 14 MAY 59 REVISED (G) FOR CHANGES SEE SHEETS 1 AND 2

USER SYMBOLS: ARMY - AV, NAVY -, USAF -

REVIEWER SYMBOLS: ARMY - MU, MI, EL; NAVY - SH, EC; USAF - 11, 17

"Review/user information is current as of the date of this document. For future coordination of changes to this document, draft circulation should be based on the information in the current DODISS."

This military standard is approved for use by all Departments & Agencies of the Department of Defense. Selection for all new engineering and design applications and for repetitive use shall be made from this document.

P.A. NAVY - AS; Other Cust ARMY - EL; AF - 85	TITLE: CONNECTORS, RECEPTACLE, ELECTRIC, SERIES 1, BOX MOUNTING FLANGE, BAYONET COUPLING, SOLDER CONTACT	MILITARY STANDARD MS3112
PROCUREMENT SPECIFICATION MIL-C-26482	SUPERSEDES	SHEET 2 OF 2

DD FORM 1 MAR 72 672-1 (Coordinated) PREVIOUS EDITIONS OF THIS FORM ARE OBSOLETE PLATE NO. 23065

U.S. GOVERNMENT PRINTING OFFICE: 1979—603-022/3159