FED. SUP CLASS
5935

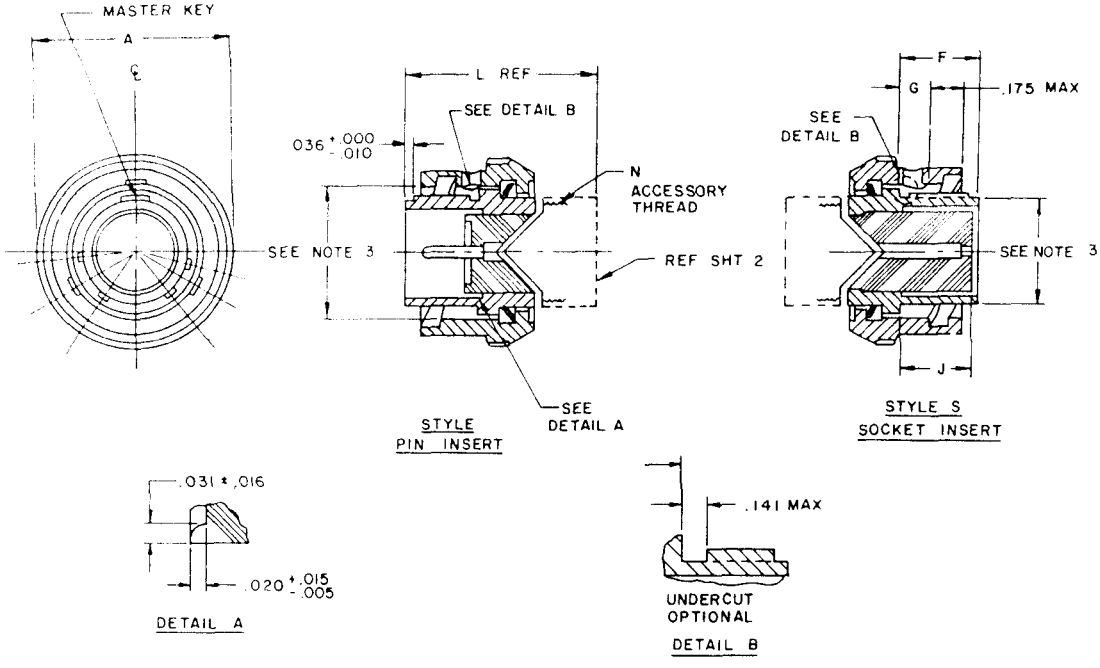

Classes E, F, J and P plugs

Size	A Max dia overall	F ±.010 Shldr location	G ±.020 Bay lock location	J +.020 -.000 Socket insert location	N Class 2A accessory thread UNEF
8	.782				.438-28
10	.926				.562-24
12	1.043				.6875-24
14	1.183	.353	.113	.337	.8125-20
16	1.305				.9375-20
18	1.391				1.0625-18
20	1.531				1.1875-18
22	1.656	.415		.399	1.3125-18
24	1.777		.152		1.4375-18

Ⓓ FOR CHANGES SEE SHEET 2

APPROVED 14 May 59 REVISED Ⓐ 24 Aug 62 Ⓑ 15 Feb 67 Ⓒ 5 SEPT 1975 Ⓓ 19 Aug 76

User activities: Army AV, Navy, Air Force

Reviewer activities: Army MU, MI, EL, Navy EC, SH, Air Force 11, 17

This ... standard is approved for use by all Departments and Agencies of the Department of Defense. Selection for all new engineering and design applications and for repetitive use ... from this document.

P.A Navy - AS Other Cust Army - EL AF - 85	International interest	TITLE CONNECTORS, PLUG, ELECTRIC, SERIES 1, SOLDER TYPE, STRAIGHT, BAYONET COUPLING
Procurement Specification MIL-C-26482		SUPERSEDES

MILITARY STANDARD

MS 3116

SHEET 1 OF 2

DD FORM 1 SEP 63 672 (Coordinated) PREVIOUS EDITIONS OF THIS FORM ARE OBSOLETE

5935-2070-3

This military standard is approved for use by all Departments and Agencies of the Department of Defense. Selection for all new engineering and design applications and for repetitive use shall be made from this document.

Reviewer activities: Army MU, MI, EL
Navy EC, SH
Air Force 11, 17

User activities: Army AV
Navy
Air Force

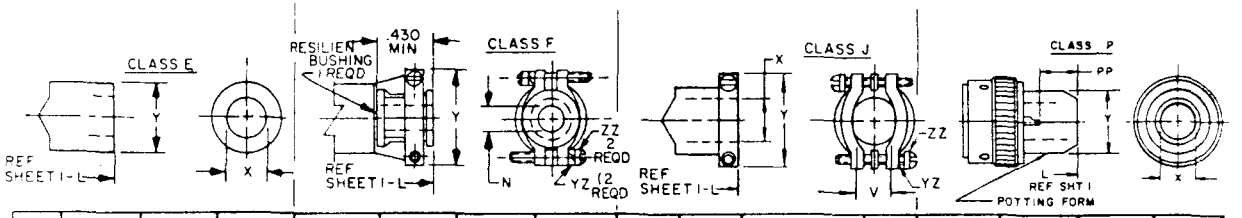

SIZE	L MAX OVER-ALL LENGTH	X DIA MIN ID	Y DIA MAX OD	L MAX OVER-ALL LENGTH	X DIA MIN OPEN	Y MAX	V MAX CLOSED	L MAX OVER-ALL LENGTH	V MAX CLOSED	X ID GLAND SEAL MIN. RANGE CLOSED	X ID GLAND SEAL MIN. RANGE OPEN	Y DIA MAX	L MAX OVER-ALL LENGTH	X DIA MIN ID	Y DIA MAX OD	PP MIN
		.259	.608		.234	.828	.187	2.271	.187	.168	.230	[illegible]		.317	.608	
[illegible]		.359	.734	[illegible]	.297	.891	.187		.187	.205	.312	.891		.434	.734	
[illegible]	1.328	.469	.858		.422	1.016	.281	2.411	.281	.338	.442	1.016	1.500	.548	.858	
[illegible]		.589	.984		.547	1.141	.325	2.599	.325	.416	.539	1.141		.673	.984	
[illegible]		.717	1.110	2.047	.609	1.203	.356	2.943	.356	.550	.616	1.203		.798	1.110	.250
[illegible]		.779	1.234	[illegible]	.734	1.469	.456	3.172	.456	.600	.672	1.469		.899	1.234	
[illegible]	1.453	.901	1.360	2.250			.519	3.610	.519	.635	.747		1.609	1.024	1.360	
[illegible]		1.009	1.484		.922	1.656		3.766		.670	.846	1.656		1.149	1.484	
[illegible]	1.510	1.123	1.610	2.312	.984	1.750	.657	3.985	.657	.740	.894	1.750	1.687	1.274	1.610	

SIZE		N (f) ±.010 FREE DIA	ZZ SCREW THREADS	YZ (g) LOCKWASHERS AN935 OR AN936 TYPES
8		.125	6-32UNC	AN935B6L OR -6L AN936-A6B OR -A6
10		.188		
12		.312		
14		.375		
16		.500		
18		.625	8-32UNC	AN935B8L OR -8L AN936-A8B OR -A8
20		.625		
22		.750		
24		.800		

DIMENSIONS WITH BUSHING REMOVED

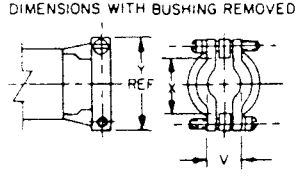

(f) USE MS3420 BUSHINGS IF REDUCED OPENING IS REQUIRED
(g) LOCKWASHERS MAY BE CAPTIVE

NOTES:
1. Dimensions are in inches.
2. True position (TP) tolerances specified are in accordance with ANSI Y14.5-1973.
3. Intermateability dimensions shall be in accordance with MIL-C-26482.
4. Insert arrangements see MIL-STD-1669.
5. Example of part number:

MS3116 E 12 - 3 P W

MS number — Class — Size — Insert arrangement — Contact style — Alternate insert position

6. For design feature purposes, this standard takes precedence over procurement documents referenced herein.
7. Referenced documents shall be of the issue in effect on date of invitations for bid.
8. NOT FOR AIR FORCE USE, USE MS3476.

FED. SUP CLASS 5935

APPROVED 14 May 59 REVISED (C) Entire standard revised (D) FOR CHANGES SEE SHEET 2

P.A Navy - AS
Other Cust Army - EL AF - 85
Procurement Specification MIL-C-26482
International interest
TITLE CONNECTORS, PLUG, ELECTRIC, SERIES 1, SOLDER TYPE, STRAIGHT, BAYONET COUPLING
SUPERSEDES
MILITARY STANDARD
MS 3116
SHEET 2 OF 2
5935-2070-3

DD FORM 1 SEP 63 672 (Coordinated) PREVIOUS EDITIONS OF THIS FORM ARE OBSOLETE

☆U.S. GOVERNMENT PRINTING OFFICE: 1976-603-766/5700