This military standard is approved for use by all Departments and Agencies of the Department of Defense. Selection for all new engineering and design applications and for repetitive use shall be made from this document when applicable.

Review activities: Army - MU, MI
Navy - SH, EC
Air Force - 99

User activities: Army - AV, ME
Navy - SH
Air Force - 11

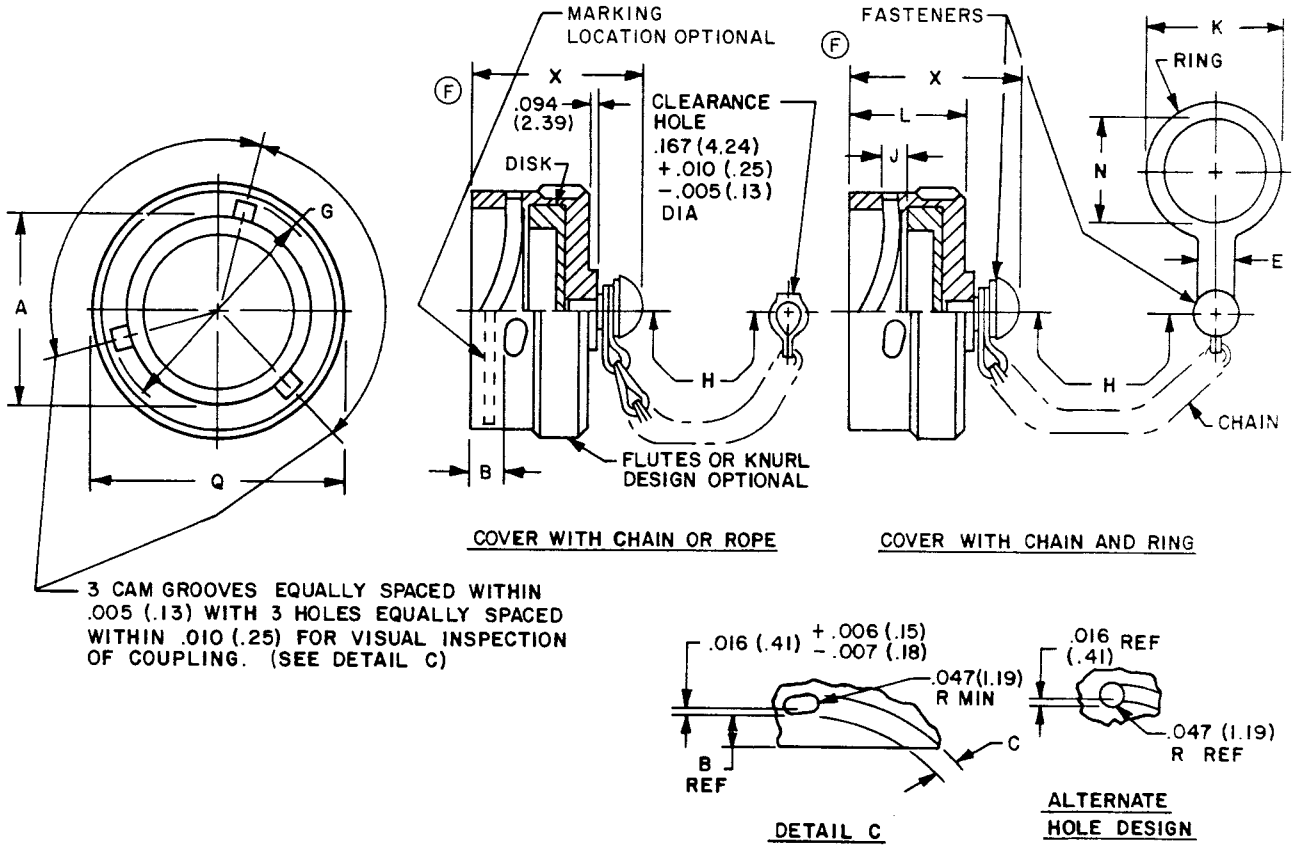

(F) DENOTES CHANGES

(F) Requisitions for covers without chain will be filled with covers with rope.
For design feature purposes, this standard takes precedence over procurement documents referenced herein.
Referenced documents shall be of the issue in effect on date of invitations for bid.

P.A Navy - AS Other Cust USAF - 85 Army - CR	International interest	TITLE COVER, PROTECTIVE, ELECTRICAL CONNECTOR RECEPTACLE, BAYONET COUPLING FOR MIL-C-26482 CONNECTORS
Procurement Specification MIL-C-26482	SUPERSEDES:	MILITARY STANDARD MS3181
		PAGE 1 OF 2

APPROVED 25 Apr 61 REVISED (D) 21 Aug 70 (E) 1 Dec 77 (F) 8 JUL 1980

FED. SUP CLASS 5935

DD FORM 1 MAY 73 672 (Coordinated) PREVIOUS EDITIONS OF THIS FORM ARE OBSOLETE.

5935-3130-2

This military standard is approved for use by all Departments and Agencies of the Department of Defense. Selection for all new engineering and design applications and for repetitive use shall be made from this document when applicable.

Review activities: Army - MU, MI
Navy - SH, EC
Air Force - 99

User activities: Army - AV, ME
Navy - SH
Air Force - 11

(F)

DASH NO. (WITH CHAIN)	DASH NO. (WITH CHAIN AND RING)	DASH NO. (WITH ROPE)	A +.005 (.13) -.001 (.03) ID	C +.016 (.41) -.001 (.03) BAY GROOVE WIDTH	B MAX BAY LOCK LOC.	G +.005 (.13) -.006 (.15) ID SLOTS	H +.500 (12.70) -.250 (6.35) STD. CHAIN/ ROPE LENGTH	J +.010 (.25) -.015 (.38) DISK LOC.	L MAX LENGTH	N MIN ID RING	Q MAX DIA OVERALL	K RING O.D. MAX	E RING THROAT MIN	X MAX LENGTH OVERALL
-8C	-8N	-8R	.481 (12.22)	.090 (2.29)	.149 (3.78)	.576 (14.63)	3.000 (76.20)	.115 (2.92)	.562 (14.27)	.578 (14.68)	.734 (18.64)	.812 (20.62)	.234 (5.94)	.875 (22.22)
-10C	-10N	-10R	.602 (15.29)			.697 (17.70)				.703 (17.86)	.859 (21.82)	1.000 (25.40)		
-12C	-12N	-12R	.761 (19.33)			.871 (22.12)	3.500 (88.90)			.891 (22.63)	1.000 (25.40)	1.188 (30.18)		
-14C	-14N	-14R	.885 (22.48)			.995 (25.27)				1.016 (25.81)	1.125 (28.58)	1.438 (36.53)		
-16C	-16N	-16R	1.010 (25.65)			1.120 (28.45)				1.141 (28.98)	1.250 (31.75)	1.562 (39.67)		
-18C	-18N	-18R	1.136 (28.85)			1.245 (31.62)				1.266 (32.16)	1.375 (34.92)	1.688 (42.88)		
-20C	-20N	-20R	1.260 (32.00)	.089/.153 (2.26)(3.89)		1.370 (34.80)	4.000 (101.60)			1.391 (35.33)	1.500 (38.10)	1.812 (46.02)		
-22C	-22N	-22R	1.385 (35.18)			1.495 (37.97)				1.516 (38.51)	1.625 (41.28)	1.938 (49.23)		
-24C	-24N	-24R	1.510 (38.35)	.137 (3.48)	.087 (2.21)	1.624 (41.25)		.147 (3.73)	.602 (15.29)	1.641 (41.68)	1.750 (44.45)	2.062 (52.37)		.875 (22.22)

NOTES:
1. Unless otherwise specified, dimensions in inches. Dimensioning and tolerancing in accordance with ANSI Y14.5-1973.
(F) 2. Materials: Cover - Aluminum alloy: Bayonet pins stainless steel, passivated.
Chain - Stainless steel, passivated in accordance with RR-C-271, type II, class 3.
Disk - Silicone elastomer.
Fasteners - Stainless steel, passivated.
Ring - Stainless steel, passivated, .030 (.76 mm) maximum thickness.
Rope - 7 strand stainless steel, passivated.
3. The chain or rope shall rotate freely on the fastener.
Example of part number:

MS3181 - 12C A L

BASIC PART NUMBER — DASH NO. — FINISH — LENGTH - L-5 inches +.500, -.250 chain or rope in lieu of standard length. Leave blank for standard lengths.

(F) 4. Finish - A-hard, anodic, non-conductive in accordance with MIL-A-8625, type III, .0008 inch minimum thickness.
5. This cover must meet the fluid resistance requirements of MIL-C-26482, series 1 and 2 connectors.
6. Metric equivalents are given for general information only and are based upon 1.00 inch = 25.4 mm.
7. Metric equivalents are in parentheses.

APPROVED 25 Apr 61 REVISED (F) For changes see pages 1 and 2 8 JUL 1980

FED. SUP CLASS 5935

P.A Navy - AS
Other Cust USAF - 85 Army - CR
International interest
Procurement Specification MIL-C-26482
SUPERSEDES:
TITLE COVER, PROTECTIVE, ELECTRICAL CONNECTOR RECEPTACLE, BAYONET COUPLING FOR MIL-C-26482 CONNECTORS
MILITARY STANDARD
MS3181
PAGE 2 OF 2

DD FORM 1 MAY 73 672 (Coordinated) PREVIOUS EDITIONS OF THIS FORM ARE OBSOLETE.

5935-3130-2