This standar[illegible] been approve[illegible] the Department of the Navy and is mandatory for use by that activity. All other military activities are required to employ this standard where suitable.

(B) INACTIVE FOR DESIGN AFTER 1 JULY 1982. DOCUMENT WILL BE CANCELLED AFTER 1 JULY 1984, USE MIL-C-85049/34.

(B) DENOTES CHANGES

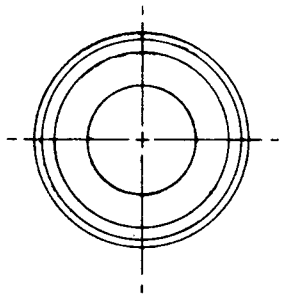

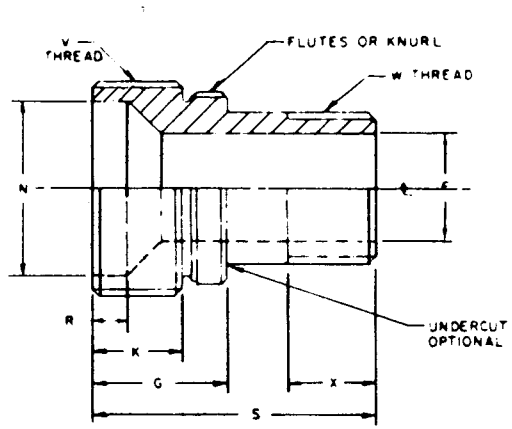

SHELL SIZE	F +.005 -.001 DIA	G +.001 -.016	K +.017 -.000	N +.010 -.011 DIA	R +.016	S MAX	V THREAD UNEF	W CLASS 2A	X MIN FULL THREAD
8	322	391	256	500	094	812	5/8 - 24	7/16 - 28	250
10	439			609			3/4 - 20	9/16 - 24	
12	564			734			7/8 - 20	11/16 - 24	
14	668			859			1 - 20	13/16 - 20	
16	793			969			1 1/8 - 18	15/16 - 20	
18	910			1 109			1 1/4 - 18	1 1/16 - 18	
20	1.025	422	302	1 219	125	906	1 3/8 - 18	1 3/16 - 18	312
22	1 150			1 344			1 1/2 - 18	1 5/16 - 18	
24	1 275			1 469		937	1 5/8 - 18	1 7/16 - 18	

NOTES
1. DIMENSIONS IN INCHES
2. MATERIAL - ALUMINUM ALLOY
3. PLATING - CADMIUM PLATE, SPECIFICATION QQ-P-416, TYPE II, CLASS 2
4. REMOVE ALL BURRS AND SHARP EDGES
5. FOR USE WITH MS3114, MS3124 & MS3474 RECEPTACLES.

EXAMPLE OF PART NUMBER

MS3184 -12

MS NUMBER SIZE

FED. SUP CLASS 5935

APPROVED 25 OCT 1966 REVISED (A) 1 Apr 1971 (B) 10 May 1982

P.A. NAVY-AS

Other Cust

Procurement Specification

Intermediate Interest

TITLE

ADAPTER FOR REAR MOUNTING, JAM NUT, MIL-C-26482 ELECTRIC CONNECTORS

SUPERSEDES:

MILITARY STANDARD

MS3184 (NAVY)

SHEET 1 OF 1

PROJECT NO. 5935-N203-03

DD FORM 10 APR 64 672

PREVIOUS EDITIONS OF THIS FORM ARE OBSOLETE

☆ U. S. GOVERNMENT PRINTING OFFICE: 1971-433-697/6208