FED. SUP CLASS
5935

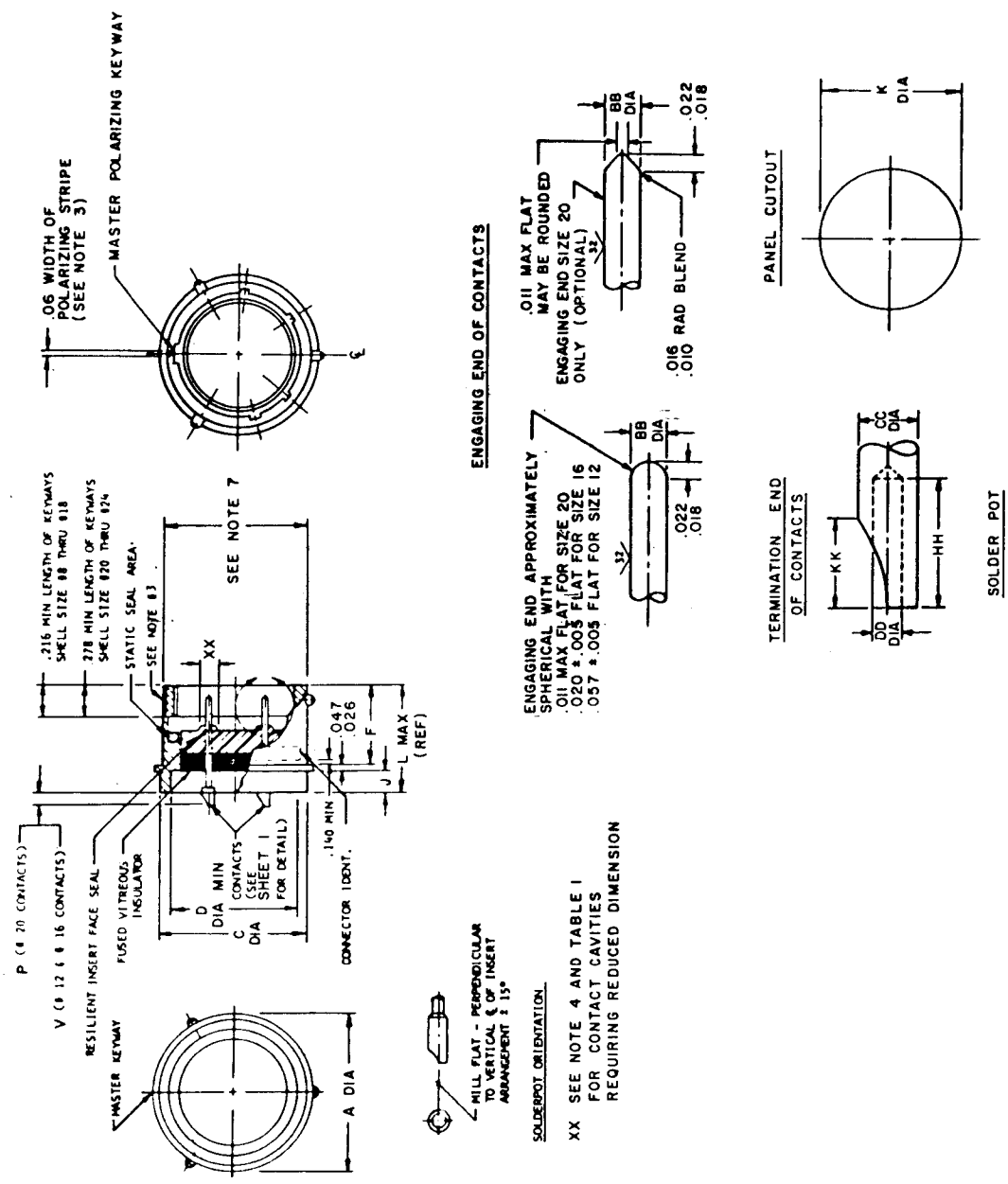

User activities: Army AV
Navy
Air Force

Reviewer activities: Army MU, MI, EL
Navy EC, SH
Air Force 11, 17

This military standard is approved for use by all Departments and Agencies of the Department of Defense. Selection for all new engineering and design applications and for repetitive use shall be made from this document.

Ⓐ Entire standard revised

APPROVED 1 Apr 71 REVISED Ⓐ 5 SEPT 1975

P.A Navy - AS Other Cust Army - EL AF - 85	International interest	TITLE CONNECTORS, RECEPTACLE, ELECTRIC, SERIES 2, SOLDER FLANGE MOUNT, BAYONET COUPLING, SOLDER PIN CONTACT CLASS H	MILITARY STANDARD MS 3443
Procurement Specification MIL-C-26482		SUPERSEDES: MS3443 (NAVY)	SHEET 1 OF 3

DD FORM 1 SEP 63 672 (Coordinated) PREVIOUS EDITIONS OF THIS FORM ARE OBSOLETE

5935-1947-27

TABLE I. Reduced diameter (XX).

Shell size	Insert arrangements	Contact cavities
8	-33 & -98	A, B, C.
12	-10	C, G.
14	-12	A, B, C, D, E, F, G, H.
14	-18	A, C, E, G, J, L.
14	-19	B, D, F, H, K, M.
16	-26	A, B, C, D, E, F, G, H, J, K, L, M, N, P, R.
18	-32	A, B, C, D, E, F, G, H, J, K, L, M, N, P, R, S, T.
22	-41	A, B, C, D, E, F, G, H, J, K, L, M, N, P, R, S, T, U, V, W, X, Y.

Connector part numbering:

MS3443 H 24 C 61 P W

- MS number
- Class
- Shell size
- Termination type and shell material
- Insert arrangement
- Contact style
- Insert position

TABLE II.

Shell size	A	C	D	F	J	K	L	P	V	Max weight (lbs)
8	.635/.615	.563/.557	.403	.598/.578	.156/.116	.570	.801	.178/.118	.248/.188	.0310
10	.760/.740	.673/.667	.515	↓	↓	.680	↓	↓	↓	.0340
12	.854/.834	.782/.776	.630	↓	↓	.789	↓	↓	↓	.0400
14	.979/.959	.907/.901	.755	↓	↓	.914	↓	↓	↓	.0510
16	1.104/1.084	1.032/1.026	.880	↓	↓	1.039	↓	↓	↓	.0620
18	1.228/1.208	1.157/1.151	.980	.598/.578	↓	1.164	.801	↓	↓	.0820
20	1.322/1.302	1.251/1.245	1.105	.660/.640	.156/.116	1.258	.863	.178 .118	.248 .188	.1000
22	1.448/1.428	1.376/1.370	1.230	.660/.640	.188/.148	1.383	.895	.146 .086	.216 .156	.1150
24	1.574/1.554	1.501/1.495	1.385	.660/.640	.188/.148	1.508	.895	.146 .086	.216 .156	.2680

APPROVED 1 Apr 71 REVISED (A) Entire standard revised

User activities: Army - AV, Navy, Air Force
Reviewer activities: Army MU, MI, EL, Navy EC, SH, Air Force 11, 17
This military standard is approved for use by all Departments and Agencies of the Department of Defense. Selection for all new engineering and design applications and for repetitive use shall be made from this document.

FED. SUP CLASS
5935

Cont size	BB	CC	DD	HH	KK
20	.041/.039	.088/.061	.048/.042	.188/.109	.110/.068
16	.0635/.0615	.116/.096	.075/.069	.251/.172	.141/.109
12	.095/.093	.150/.130	.122/.112	.251/.172	.141/.109

NOTES:

1. Dimensions are in inches.
2. Tolerances shall be .XX ±.01, .XXX ±.005, angular ±1° and X°X' ±30'.
3. Polarizing stripe, color optional.
4. Insert arrangements requiring reduced diameters for raised seal barriers on outer row of contact cavities as indicated. (See table I).
5. True position tolerances specified are in accordance with ANSI Y14.5-1973.
6. For insert arrangement see MIL-STD-1669.
7. Intermateability dimensions shall be in accordance with MIL-C-26482.
8. Shell material: Cold rolled steel per QQ-S-637.
9. Shell finish: .0001 minimum tin per MIL-T-10727 over nickel per QQ-W-290.
10. The complete requirements for procuring this connector described herein shall consist of this document and the issue in effect of MIL-C-26482.
11. For design feature purposes, this standard takes precedence over procurement documents referenced herein.
12. Referenced documents shall be of the issue in effect on date of invitations for bid.

APPROVED 1 Apr 71 REVISED (A) Entire standard revised

User activities: Army AV
Navy
Air Force

Reviewer activities: Army MU, MI, EL
Navy EC, SH
Air Force 11, 17

This military standard is approved for use by all Departments and Agencies of the Department of Defense. Selection for all new engineering and design applications and for repetitive use shall be made from this document.

P.A Navy - AS Other Cust Army - EL AF - 85	International interest	TITLE CONNECTORS, RECEPTACLE, ELECTRIC, SERIES 2, SOLDER FLANGE MOUNT, BAYONET COUPLING, SOLDER PIN CONTACT CLASS H	MILITARY STANDARD MS 3443
Procurement Specification MIL-C-26482		SUPERSEDES: MS3443 (NAVY)	SHEET 3 OF 3

DD FORM 1 SEP 63 672 (Coordinated) PREVIOUS EDITIONS OF THIS FORM ARE OBSOLETE. 5935-1947-27

U.S. GOVERNMENT PRINTING OFFICE: 1975-603-766/1667