This military standard is approved for use by all Departments and Agencies of the Department of Defense. Selection for all new engineering and design applications and for repetitive use shall be made from this document when applicable.

Review activities: Army - AR, Navy - EC, SH, Air Force - 11, 17, 99

User activities: Army - AV, Navy -, Air Force -

FED. SUP CLASS 5935

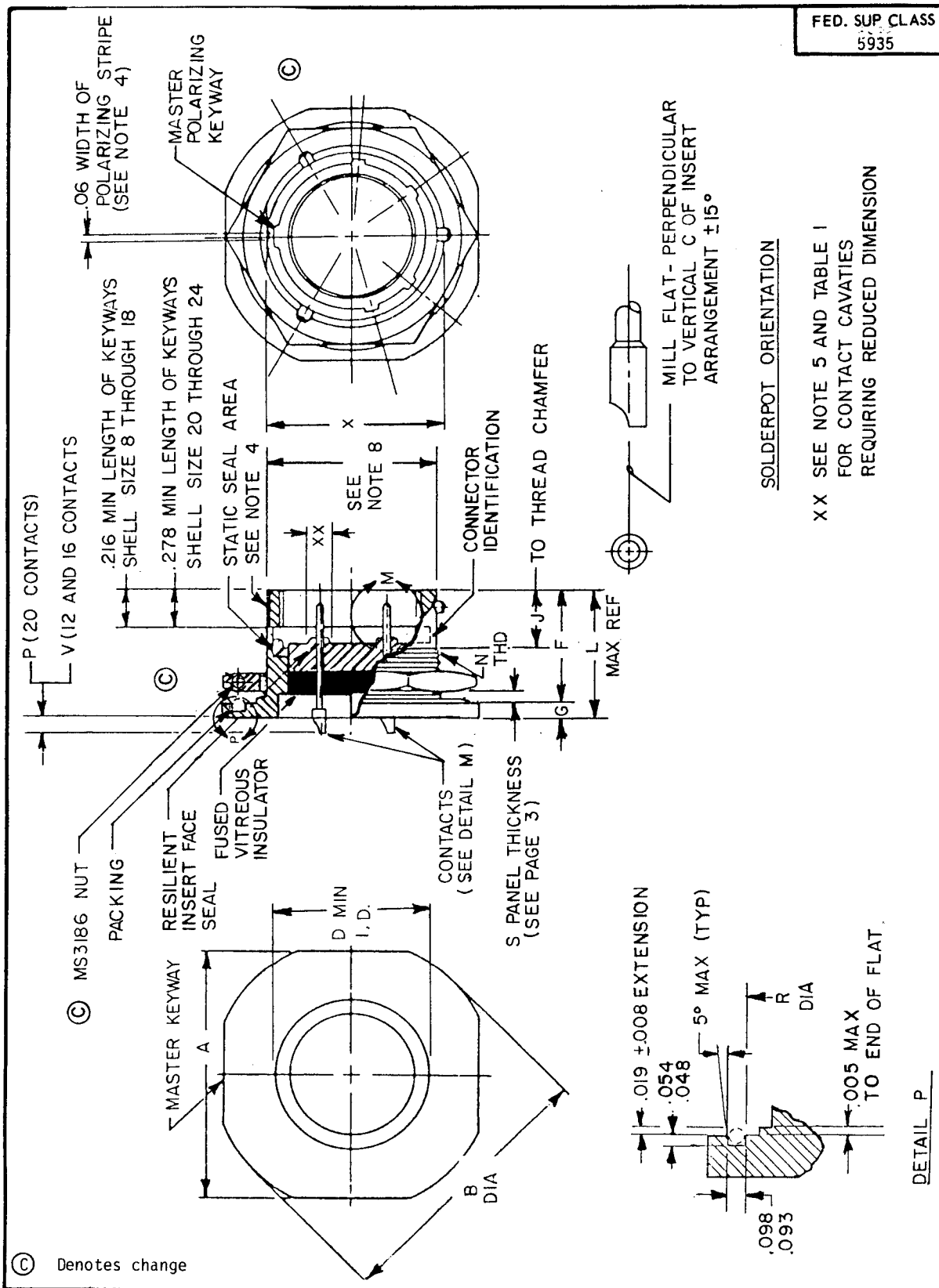

© Denotes change

P.A Army - CR Other Cust Navy - AS AF - 85	International interest	TITLE CONNECTORS, RECEPTACLE, ELECTRIC, SERIES 2, SINGLE HOLE MOUNT, BAYONET COUPLING, SOLDER PIN CONTACT, CLASS H	MILITARY STANDARD MS3449
Procurement Specification MIL-C-26482		SUPERSEDES: MS3449 (Navy)	PAGE 1 OF 5

APPROVED 1 Apr 71 REVISED (A) 5, Sep 75 (B) 31 July 1978 (C) 29 October 1986

DD FORM 1 MAY 73 672 (Coordinated) PREVIOUS EDITIONS OF THIS FORM ARE OBSOLETE. 5935-3558-01

AMSC N/A

DISTRIBUTION STATEMENT A. Approved for public release; distribution is unlimited.

FED. SUP CLASS
5935

ENGAGING END OF CONTACTS

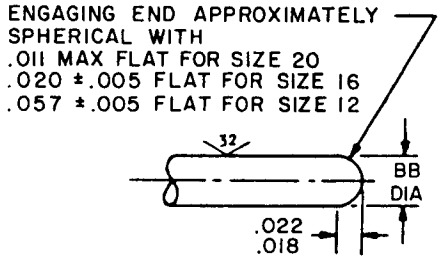

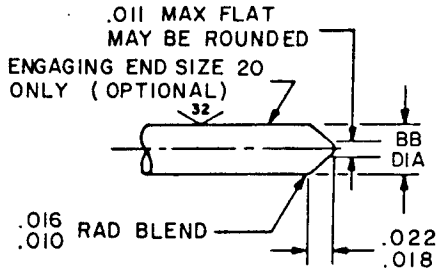

TERMINATION END OF CONTACTS

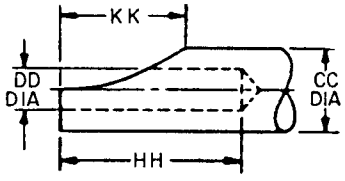

SOLDER POT

PANEL CUTOUT

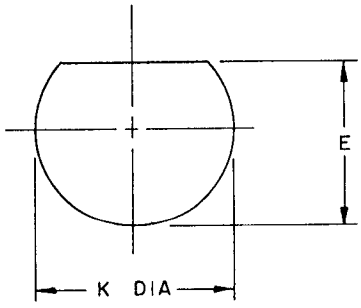

DETAIL M

APPROVED 1 April 71 REVISED (C) For changes see pages 1, 3, and 5.

User activities: Army - AV, Navy - , Air Force -

Review activities: Army - AR, Navy - EC, SH, Air Force - 11, 17, 99

This military standard is approved for use by all Departments and Agencies of the Department of Defense. Selection for all new engineering and design applications and for repetitive use shall be made from this document when applicable.

P.A Army - CR Other Cust Navy - AS AF - 85	International interest	TITLE CONNECTORS, RECEPTACLE, ELECTRIC, SERIES 2, SINGLE HOLE MOUNT, BAYONET COUPLING, SOLDER, PIN CONTACT, CLASS H	MILITARY STANDARD MS3449
Procurement Specification MIL-C-26482		SUPERSEDES: MS3449 (Navy)	PAGE 2 OF 5

DD FORM 1 MAY 73 672 (Coordinated) PREVIOUS EDITIONS OF THIS FORM ARE OBSOLETE.

FED. SUP CLASS
5935

Shell size	A	B	D	E	F	G	J	K	L
8	.954/.923	1.078/1.047	.403	.536	.707/.691	.113/.097	.378/.358	.572	.820
10	1.078/1.047	1.203/1.172	.515	.661	.707/.691	.113/.097	.378/.358	.697	.820
12	1.266/1.235	1.391/1.360	.630	.824	.707/.691	.113/.097	.378/.358	.895	.820
14	1.391/1.360	1.516/1.485	.755	.948	.707/.691	.113/.097	.378/.358	1.010	.820
16	1.516/1.485	1.641/1.610	.880	1.072	.707/.691	.113/.097	.378/.358	1.135	.820
18	1.641/1.610	1.766/1.735	.980	1.197	.707/.691	.113/.097	.378/.358	1.260	.820
20	1.828/1.797	1.954/1.923	1.105	1.322	.772/.754	.148/.128	.378/.358	1.385	.920
22	1.954/1.923	2.078/2.047	1.230	1.447	.772/.754	.148/.128	.378/.358	1.510	.920
24	2.078/2.047	2.203/2.172	1.385	1.572	.803/.705	.148/.128	.405/.385	1.635	.951

©

Shell size	N UNEF-2A	P	R	S	V	X	Max weight
8	.5625-24	.134/.074	.609	.187/.062	.204/.144	.525	.0430
10	.6875-24	.134/.074	.734	.187/.062	.204/.144	.650	.0610
12	.875-20	.134/.074	.921	.187/.062	.204/.144	.813	.0880
14	1.000-20	.134/.074	1.046	.187/.062	.204/.144	.937	.1100
16	1.125-18	.134/.074	1.171	.187/.062	.204/.144	1.061	.1310
18	1.250-18	.134/.074	1.296	.187/.062	.204/.144	1.186	.1720
20	1.375-18	.099/.039	1.484	.250/.062	.169/.109	1.311	.2110
22	1.500-18	.099/.039	1.609	.250/.062	.169/.109	1.436	.2420
24	1.625-18	.069/.009	1.734	.250/.062	.139/.079	1.561	.2930

For changes see pages 1, 3, and 5

APPROVED 1 April 71 REVISED ©

User activities: Army - AV
Navy -
Air Force -

Review activities: Army - AR
Navy - EC, SH
Air Force - 11, 17, 99

This military standard is approved for use by all Departments and Agencies of the Department of Defense. Selection for all new engineering and design applications and for repetitive use shall be made from this document when applicable.

P.A
Army - CR
Other Cust
Navy - AS
AF - 85

International interest

TITLE CONNECTORS, RECEPTACLE, ELECTRIC, SERIES 2, SINGLE HOLE MOUNT, BAYONET COUPLING, SOLDER PIN CONTACT, CLASS H

MILITARY STANDARD

MS3449

Procurement Specification
MIL-C-26482

SUPERSEDES: MS3449 (Navy)

DD FORM 1 MAY 73 672 (Coordinated) PREVIOUS EDITIONS OF THIS FORM ARE OBSOLETE.

Cont size	BB	CC	DD	HH	KK
20	.041/.039	.088/.061	.048/.042	.188/.109	.110/.068
16	.0635/.0615	.116/.096	.075/.069	.251/.172	.141/.109
12	.095/.093	.150/.130	.122/.112	.251/.172	.141/.109

TABLE I. Reduced diameters (XX).

Shell size	Insert arrangements	Contact cavities
8	-33 and -98	A, B, C
12	-10	C, G.
14	-12	A, B, C, D, E, F, G, H.
14	-18	A, C, E, G, J, L.
14	-19	B, D, F, H, K, M.
16	-26	A, B, C, D, E, F, G, H, J, K, L, M, N, P, R.
18	-32	A, B, C, D, E, F, G, H, J, K, L, M, N, P, R, S, T.
22	-41	A, B, C, D, E, F, G, H, J, K, L, M, N, P, R, S, T, U, V, W, X, Y.

Connector part numbering:

MS3449 H 24 C 61 P W

- MS number
- Class
- Shell size
- Termination type and shell material
- Insert arrangement
- Contact style
- Insert position

User activities: Army - AV
Navy -
Air Force -

Review activities: Army - AR
Navy - EC, SH
Air Force - 11, 17, 99

This military standard is approved for use by all Departments and Agencies of the Department of Defense. Selection for all new engineering and design applications and for repetitive use shall be made from this document when applicable.

APPROVED 1 April 71 REVISED © For changes see pages 1, 3, and 5

FED. SUP CLASS
5935

Inches	mm	Inches	mm	Inches	mm
.005	0.13	.250	6.35	1.186	30.12
.008	0.20	.251	6.38	1.197	30.40
.016	0.41	.2930	7.442	1.203	30.56
.018	0.46	.358	9.09	1.205	30.61
.019	0.48	.378	9.60	1.230	31.24
.022	0.56	.403	10.24	1.235	31.37
.039	0.99	.515	13.08	1.250	31.75
.041	1.04	.525	13.34	1.266	32.00
.042	1.07	.536	13.61	1.266	32.16
.0430	1.092	.5625	14.288	1.296	32.92
.048	1.22	.572	14.53	1.311	33.30
.054	1.37	.609	15.47	1.322	33.58
.061	1.55	.650	16.51	1.375	34.92
.0615	1.562	.6875	17.46	1.385	35.18
.062	1.57	.691	17.55	1.391	35.33
.0635	1.613	.697	17.70	1.436	36.47
.068	1.73	.707	17.96	1.447	36.75
.088	2.24	.734	18.64	1.455	36.96
.093	2.36	.754	19.15	1.484	37.69
.095	2.41	.767	19.48	1.500	38.10
.109	2.77	.772	19.61	1.510	38.35
.110	2.79	.803	20.40	1.516	38.51
.112	2.84	.820	20.83	1.560	39.62
.113	2.87	.875	22.22	1.561	39.65
.116	2.95	.880	22.35	1.572	39.93
.122	3.10	.892	22.66	1.579	40.11
.128	3.25	.895	22.73	1.609	40.87
.130	3.30	.920	23.37	1.625	41.28
.131	3.33	.921	23.39	1.635	41.53
.141	3.58	.923	23.44	1.641	41.68
.144	3.66	.937	23.80	1.705	43.31
.148	3.76	.954	24.23	1.734	44.04
.150	3.81	1.010	25.65	1.766	44.86
.169	4.29	1.061	26.95	1.828	46.43
.172	4.37	1.078	27.38	1.829	46.46
.187	4.75	1.105	28.07	1.954	49.63
.204	5.18	1.125	28.58	2.078	52.78
.2110	5.359	1.135	28.83	2.203	55.96
.2420	6.147	1.171	29.74		

NOTES:
1. Dimensions are in inches.
2. Metric equivalents are given for general information only.
3. Tolerances shall be .XX ±.01 (±0.25 mm), .XXX ±.005 (±0.13 mm), angular ±1° and X°X' ±30'.
4. Polarizing stripe, color optional.
5. Insert arrangements requiring reduced diameters for raised seal barriers on outer row of contact cavities as indicated. (See table I).
6. True position tolerances specified are in accordance with ANSI Y14.5-1973.
7. For insert arrangement see MIL-STD-1669.
8. Intermateability dimensions shall be in accordance with MIL-C-26482.
9. Shell material: Cold rolled steel per QQ-S-637.
10. Shell finish: .0001 (0.003 mm) minimum tin per MIL-T-10727 over nickel per QQ-N-290.
11. The complete requirements for acquiring this connector described herein shall consist of this document and the issue in effect of MIL-C-26482.
12. For design feature purposes, this standard takes precedence over acquisition documents referenced herein.
13. © Referenced Government documents of the issue listed in that issue of the Department of Defense Index of Specifications and Standards (DODISS) specified in the solicitation form a part of this standard to the extent specified herein.

APPROVED 1 April 71 REVISED © For changes see pages 1, 3, and 5

User activities: Army - AV, Navy -, Air Force -

Review activities: Army - AR, Navy - EC, SH, Air Force - 11, 17, 99

This military standard is approved for use by all Departments and Agencies of the Department of Defense. Selection for all new engineering and design applications and for repetitive use shall be made from this document when applicable.

P.A Army - CR; Other Cust Navy - AS, AF - 85	International interest	TITLE CONNECTORS, RECEPTACLE, ELECTRIC, SERIES 2, SINGLE HOLE MOUNT, BAYONET COUPLING, SOLDER PIN CONTACT, CLASS H	MILITARY STANDARD MS 3449
Procurement Specification MIL-C-26482		SUPERSEDES: MS3449 (Navy)	PAGE 5 OF 5

DD FORM 1 MAY 73 672 (Coordinated) PREVIOUS EDITIONS OF THIS FORM ARE OBSOLETE.