INCH-POUND

MS3474H
19 December 1994
SUPERSEDING
MS3474G
10 June 1993

MILITARY SPECIFICATION SHEET

CONNECTORS, RECEPTACLE, ELECTRICAL, SERIES 2, CRIMP TYPE, REAR MOUNTING JAM NUT, BAYONET COUPLING, CLASSES A, L, S, AND W

This specification is approved for use by all Departments and Agencies of the Department of Defense.

The requirements for acquiring the product described herein shall consist of this specification sheet and the issue of the following specification listed in that issue of the Department of Defense Index of Specifications and Standards (DODISS) specified in the solicitation: MIL-C-26482.

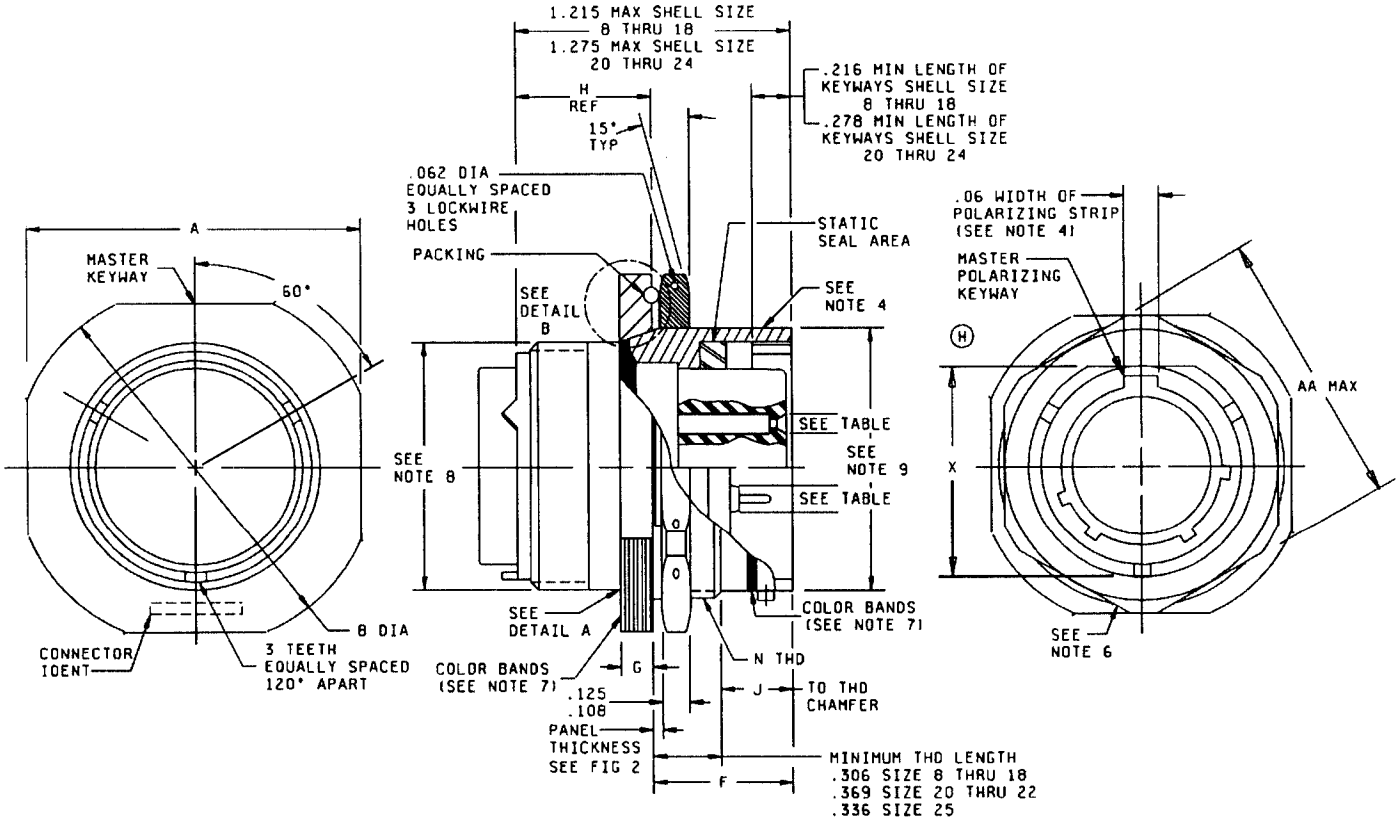

FIGURE 1. Dimensions and configurations.

(H) denotes change

DISTRIBUTION STATEMENT A. Approved for public release; distribution is unlimited.

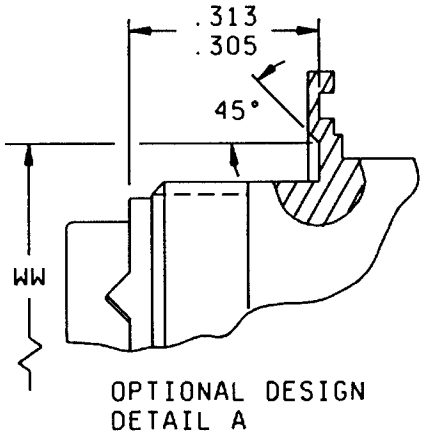

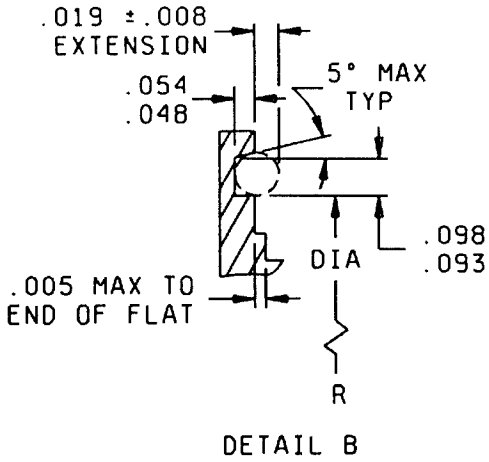

Connector dimensions.

Size	A	B	F	G	H	J
8	.954(24.23) .923(23.44)	1.078(27.38) 1.047(26.59)	.707(17.95) .658(17.95)	.113(2.87) .086(2.19)	.524 (13.31)	.378(9.60) .346(8.79)
10	1.078(27.38) 1.047(26.59)	1.203(30.56) 1.172(29.77)	.707(17.95) .658(16.71)	.113(2.87) .086(2.19)	.524 (13.31)	.378(9.60) .346(8.79)
12	1.266(32.16) 1.235(31.37)	1.391(35.33) 1.360(34.54)	.707(17.95) .658(16.71)	.113(2.87) .086(2.19)	.524 (13.31)	.378(9.60) .346(8.79)
14	1.391(35.33) 1.360(34.54)	1.516(38.58) 1.485(37.72)	.707(17.95) .658(17.95)	.113(2.87) .086(2.19)	.524 (13.31)	.378(9.60) .346(8.79)
16	1.516(38.51) 1.485(37.72)	1.641(41.68) 1.610(40.89)	.707(17.95) .658(17.95)	.113(2.87) .086(2.19)	.524 (13.31)	.378(9.60) .346(8.79)
18	1.641(41.68) 1.610(40.89)	1.766(44.86) 1.735(44.07)	.707(17.95) .658(17.95)	.113(2.87) .086(2.19)	.524 (13.31)	.378(9.60) .346(8.79)
20	1.828(46.63) 1.797(45.64)	1.954(49.63) 1.923(48.84)	.772(19.61) .721(18.31)	.148(3.76) .096(2.44)	.521 (13.23)	.378(9.60) .346(8.79)
22	1.954(49.63) 1.923(48.84)	2.078(52.78) 2.047(51.99)	.772(19.61) .721(18.31)	.148(3.76) .096(2.44)	.521 (13.23)	.378(9.60) .346(8.79)
24	2.078(52.78) 2.047(51.99)	2.203(55.96) 2.172(55.17)	.772(19.61) .721(18.31)	.148(3.76) .096(2.44)	.521 (13.23)	.405(10.29) .379(9.63)

FIGURE 1. Connectors and dimensions - Continued.

Connector dimensions - Continued.

Size	N thread UNEF-2A	R	X	AA	WW	Pin	Socket
8	.5625-24 (14.29-24)	.609 (15.47)	.525 (13.34)	.767 (19.48)	.570(14.48) .566(14.38)	.0224 (.569)	.0296 (.752)
10	.6875-24 (17.46-24)	.734 (18.64)	.650 (16.51)	.892 (22.66)	.693(17.60) .689(17.50)	.0342 (8.69)	.0358 (.909)
12	.875-20 (22.23-20)	.921 (23.39)	.813 (20.55)	1.079 (27.41)	.868(22.05) .864(21.95)	.0497 (1.262)	.0528 (1.341)
14	1.000-20 (25.40-20	1.046 (26.57)	.937 (23.80)	1.205 (30.61)	.994(25.25) .988(25.10)	.0621 (1.577)	.0673 (1.709)
16	1.125-18 (28.58-18)	1.171 (29.74)	1.061 (26.95)	1.329 (33.76)	1.122(28.50) 1.116(28.35)	.0766 (1.946)	.0858 (2.180)
18	1.250-18 (31.75-18)	1.296 (32.92)	1.186 (30.12)	1.455 (36.96)	1.238(31.45) 1.232(31.29)	.0899 (2.283)	.1003 (2.548)
20	1.375-18 (34.93-18)	1.484 (37.69)	1.311 (33.30)	1.579 (40.11)	1.364(34.65) 1.359(34.52)	.1153 (2.929)	.1280 (3.251)
22	1.500-18 (38.10-18)	1.609 (40.87)	1.436 (36.47)	1.705 (43.81)	1.492(37.90) 1.482(37.64)	.1336 (3.393)	.1495 (3.797)
24	1.625-18 (41.28-18)	1.734 (44.04)	1.561 (39.65)	1.829 (46.46)	1.617(41.07) 1.607(40.82)	.1578 (4.008)	.1777 (4.514)

Inches	mm	Inches	mm	Inches	mm	Inches	mm	Inches	mm
.005	0.13	.054	1.37	.108	2.74	.305	7.75	.369	9.37
.008	0.20	.060	1.50	.125	3.18	.306	7.77	1.215	30.86
.019	0.48	.062	1.57	.216	5.49	.313	7.95	1.275	32.39
.048	1.22	.093	2.36	.278	7.06	.336	8.53		

NOTES:
1. Dimensions are in inches. Metric equivalents are in parentheses.
2. Metric equivalents are given for general information only.
3. Unless otherwise specified, tolerances are ±.005 (0.13 mm) for three place decimals and ±.01 (0.3 mm) for two place decimals, and angular tolerances are ±0° ±1 and 0° 0' ±30'.
4. Polarizing stripe, color optional.
5. Class E cancelled and replaced by class L.
6. MS3186 Hex nut may be substituted provide .125/.108 thickness requirement is satisfied.
7. Color band: .070±.031 wide, color blue. Band location must be such that it is visible when mounted.
8. (H) Rear accessory interchangeability dimensions shall be in accordance with MIL-C-26482.
9. (H) Intermateability dimensions shall be in accordance MIL-C-26482.

FIGURE 1. Dimensions and configurations - Continued.

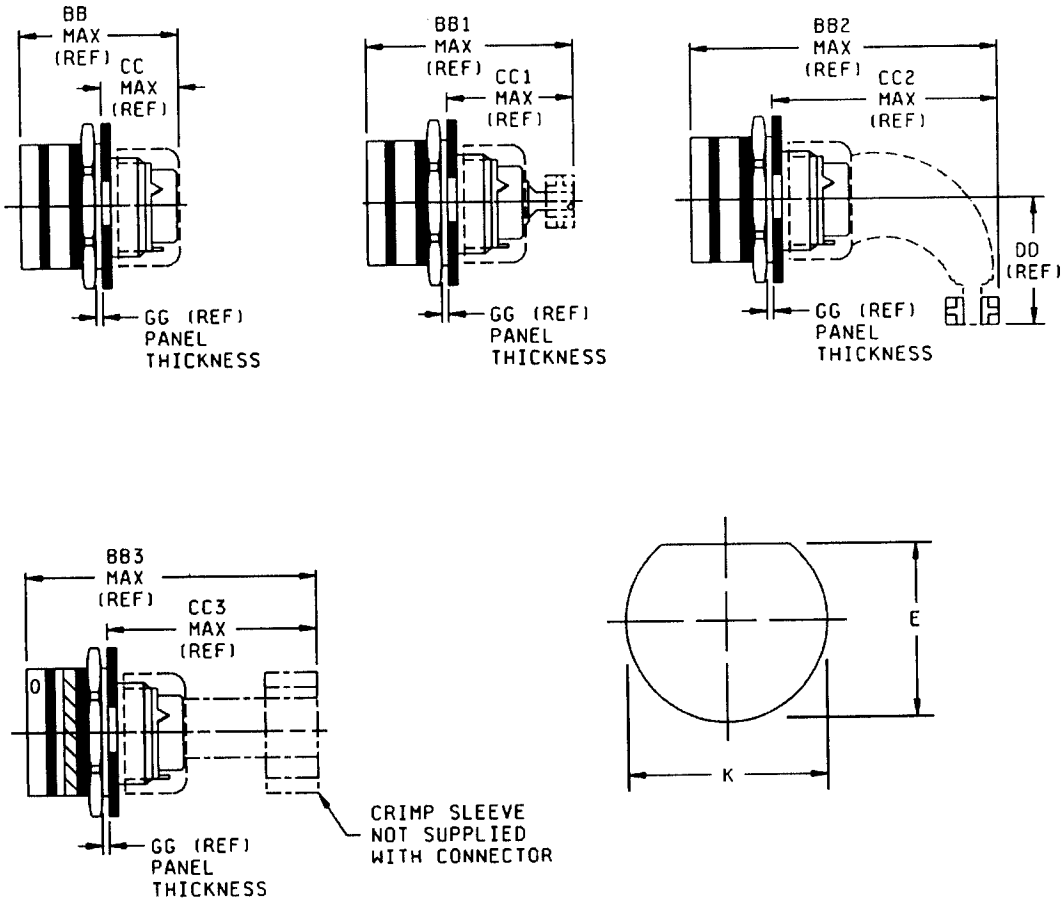

FIGURE 2. Backshell.

Backshell dimensions.

Size	E	K	BB	BB1	BB2	BB3	CC
8	.536 (13.61)	.572 (14.53)	1.492 (37.90)	1.842 (46.79)	2.115 (53.72)	2.339 (59.41)	.801 (20.35)
10	.661 (16.79)	.697 (17.70)	1.492 (37.90)	1.842 (46.79)	2.115 (53.72)	2.339 (59.41)	.801 (20.35)
12	.824 (20.93)	.895 (22.73)	1.492 (37.90)	1.842 (46.79)	2.250 (57.12)	2.339 (59.41)	.801 (20.35)
14	.948 (24.08)	1.010 (25.65)	1.492 (37.90)	2.077 (52.76)	2.340 (59.44)	2.339 (59.41)	.801 (20.35)
16	1.072 (27.23)	1.135 (28.83)	1.492 (37.90)	2.077 (52.76)	2.475 (62.87)	2.339 (59.41)	.801 (20.35)
18	1.197 (30.40)	1.260 (32.00)	1.492 (37.90)	2.077 (52.76)	2.574 (65.38)	2.339 (59.41)	.801 (20.35)
20	1.322 (33.58)	1.385 (35.18)	1.522 (39.42)	2.137 (54.38)	2.767 (70.28)	2.397 (60.88)	.798 (20.27)
22	1.447 (36.75)	1.510 (38.35)	1.522 (39.42)	2.137 (54.38)	2.890 (73.41)	2.397 (60.88)	.798 (20.27)
24	1.572 (39.93)	1.635 (41.53)	1.522 (39.42)	2.137 (54.38)	3.012 (76.50)	2.397 60.88)	.798 (20.27)

FIGURE 2. Backshell - Continued.

Backshell dimensions - Continued.

Size	CC1	CC2	CC3	DD	GG
8	1.151 (29.24)	1.424 (36.17)	1.648 (41.68)	.830 (21.08)	.187(4.75) .062(1.57)
10	1.151 (29.24)	1.424 (36.17)	1.648 (41.68)	.880 (22.35)	.187(4.75) .062(1.57)
12	1.151 (29.24)	1.559 (39.60)	1.648 (41.68)	.950 (24.13)	.187(4.75) .062(1.57)
14	1.386 (35.20)	1.649 (41.88)	1.648 (41.68)	1.010 (25.65)	.187(4.75) .062(1.57)
16	1.386 (35.20)	1.784 (45.31)	1.648 (41.68)	1.070 (27.18)	.187(4.75) .062(1.57)
18	1.386 (35.20)	1.883 (47.83)	1.648 (41.68)	1.130 (28.70)	.187(4.75) .062(1.57)
20	1.383 (35.13)	2.013 (51.13)	1.645 (41.78)	1.190 (30.23)	.250(6.35) .062(1.57)
22	1.383 (35.13)	2.136 (54.25)	1.645 (41.78)	1.260 (32.00)	.250(6.35) .062(1.57)
24	1.383 (35.13)	2.258 (57.35)	1.645 (41.78)	1.320 (33.53)	.219(5.56) .062(1.57)

NOTES:
1. Dimensions are in inches. Metric equivalents are in parentheses.
2. Metric equivalents are given for information only.
3. Unless otherwise specified, tolerances are ±.005 (0.13 mm) for three place decimals and ±.01 (0.3 mm) for two place decimals, and angular tolerances are ±0° ±1° and 0° 0' ±30'.
4. Rear accessory interchangeabilitydimensions shall be in accordance with MIL-C-26482.

FIGURE 2. Backshell - Continued.

TABLE I. Insert arrangements requiring reduced diameters for raised seal barriers or lead-in chamfer on outer row of contact cavities.

Shell size	Insert arrangement	Contact cavities
8	-33 and -98	A, B, C
12	-10	C, G
14	-9	A, B, C, D, E, F, G, H, J
14	-12	A, B, C, D, E, F, G, H
14	-18	A, C, E, G, J, L
14	-19	B, D, F, H, K, M
16	-26	A, B, C, D, E, F, G, H, J, K, L, M, N, P, R
18	-32	A, B, C, D, E, F, G, H, J, K, L, M, N, P, R, S, T
22	-41	A, B, C, D, E, F, G, H, J, K, L, M, N, P, R, S, T, U, V, W, X, Y

REQUIREMENTS:

Dimensions and configuration: See figure 1 and 2.

Mating connector: This connector mates with MS3475 and MS3476.

For insert arrangement: See MIL-STD-1669 and table I.

For connector accessories: See MIL-C-85049.

Connector assembly must be used with a backshell. Backshell must be acquired separately.

Marking: Connectors identification marking shall be in accordance with MIL-C-26482.

Part or Identifying Number (PIN) example (1):

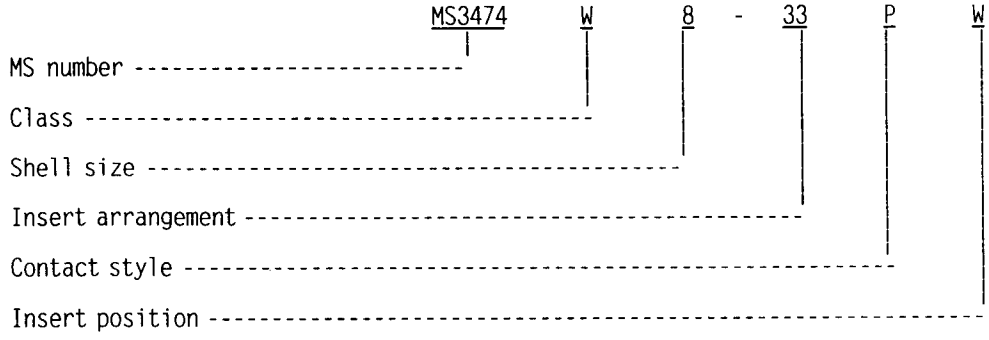

Part or Identifying Number (PIN) example (2):

```
                                MS3474     W     16   -   8     P     W
  MS number -------------------------'        |     |       |     |     |
  Class ---------------------------------------|     |       |     |     |
  Shell size ------------------------------------------|       |     |     |
  Insert arrangement ------------------------------------------|     |     |
  Contact style ------------------------------------------------------|     |
  Insert position ------------------------------------------------------------|
```

Qualification:

QPL evaluating activity: Defense Electronics Supply Center, (DESC-E), Dayton, OH 45444.

Superseding data:

```
MIL-C-83723/5  R    **    **  *                    MS3474   L    **-     **  *
     |         |    |     |   |                        |     |    |       |   |
      ---------------------------------------------------|     |    |       |   |
               |    |     |   |                              |    |       |   |
                ------------------- Class ---------------------|    |       |   |
                     |     |   |                                   |       |   |
                      ---------------- Shell size ---------------------|       |   |
                            |   |                                           |   |
                             --------- Insert arrangemet ------------------------|   |
                                 |                                                   |
                                  ---- Insert position ------------------------------|

MIL-C-83723/6  R    **  -  **  *                    MS3474   L    **  -  **  *
     '         '    '     '   '                        '     |    |       |   |
      ---------------------------------------------------|     |    |       |   |
               |    |     |   |                              |    |       |   |
                ------------------- Class ---------------------|    |       |   |
                     |     |   |                                   |       |   |
                      ---------------- Shell size ---------------------|       |   |
                            |   |                                           |   |
                             --------- Insert arrangement ------------------------|   |
                                 |                                                   |
                                  ---- Insert position ------------------------------|
```

```
MS3114  E  **  -  *  *  W                          MS3474  *  **  -  **  *  W
  |     |   |      |   |   |                          |     |     |     |   |
  ---------------------------------- MS number -------------     |     |     |   |
        |   |      |   |   |                                   |     |     |   |
         ------------------------- Class ------------------------     |     |   |
            |      |   |   |                                         |     |   |
             ---------------------- Shell size ----------------------------     |   |
                    |   |   |                                                 |   |
                     -------------- Insert arrangement ------------------------     |
                        |   |                                                       |
                         --------- Contact style ---------------------------------------
                             |                                                         |
                              ---- Insert position ------------------------------------
```

Cross reference of class designators

Old (MIL-C-83723)	New (MIL-C-26482)
A	A
R	L
G	S

CONCLUDING MATERIAL

Custodians:
- Air Force -85
- Army - CR
- Navy - AS
- NASA - NA

Review activities:
- Army - AR
- Navy - EC, SH
- Air Force - 99

User activities:
- Air Force - 11
- Army - AV
- Navy - MC

Preparing activity:
- Army - CR

Agent:
- DLA - ES

(Project 5935-3988)