DISTRIBUTION STATEMENT A. Approved for public release; distribution is unlimited.
This military standard is approved for use by all Departments and Agencies of the Department of Defense. Selection for all new engineering and design applications and for repetitive use shall be made from this document when applicable.

Review activities: Army - AR
Navy - EC, SH
Air Force - 11, 17, 99

User activities: Army - AV
Navy - MC
Air Force -

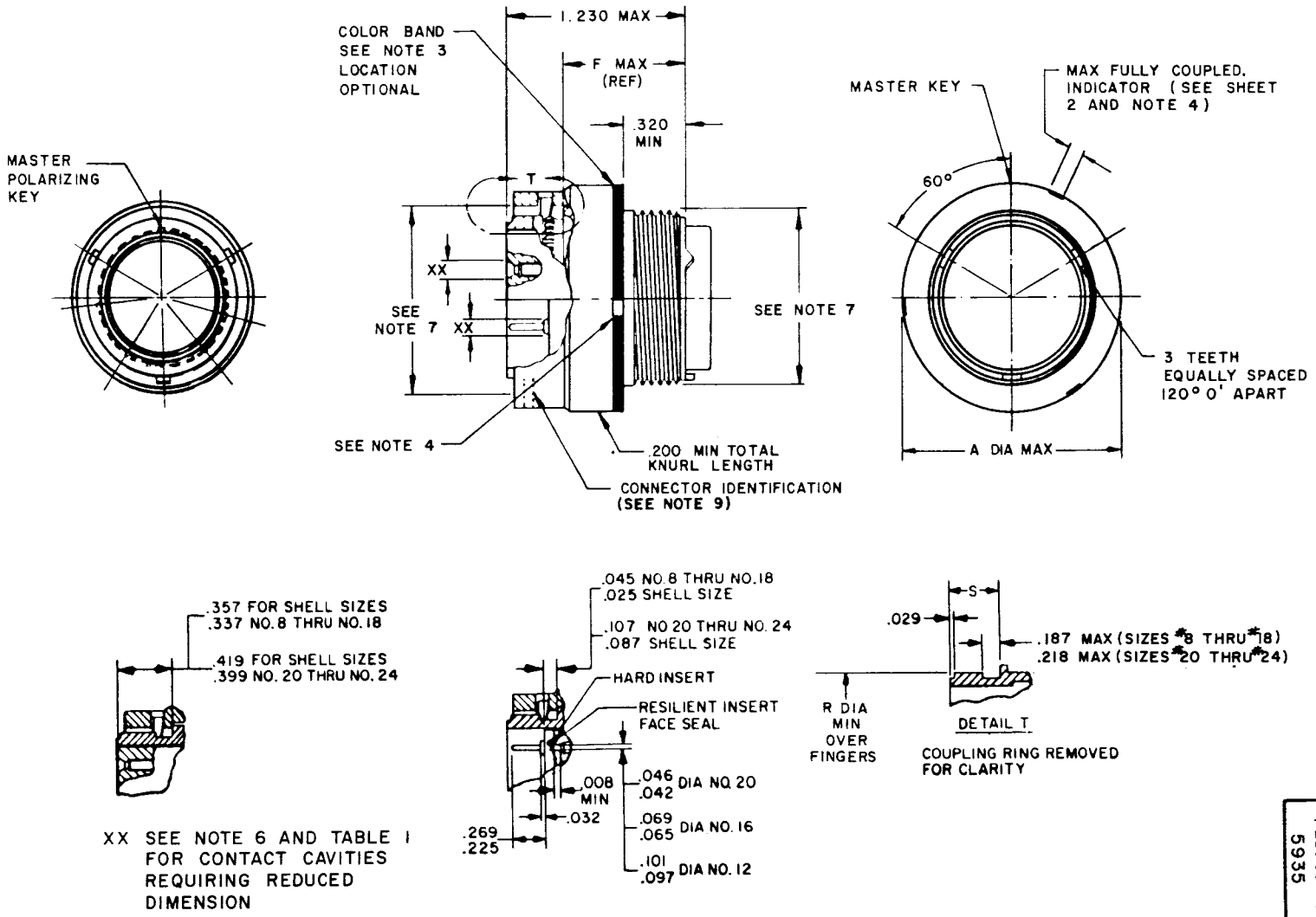

FED. SUP CLASS
5935

(D) "ENTIRE STANDARD REVISED"

P.A ARMY-CR	
Other Cust NAVY-AS AF-85	International interest
Procurement Specification MIL-C-26482	
TITLE CONNECTORS, PLUG ELECTRIC, RFI SHIELDED, SERIES 2, CRIMP TYPE, BAYONET COUPLING, CLASSES L, S, AND W	
SUPERSEDES: MS 3475 (NAVY) MIL-C-83723/42A MIL-C-83723/43A	
MS 3475	MILITARY STANDARD
PAGE 1 OF 4	

APPROVED 1 APR 71 REVISED (D) 12 Jul 85

DD FORM 1 MAY 73 672 (Coordinated) PREVIOUS EDITIONS OF THIS FORM ARE OBSOLETE

5935-3465-5

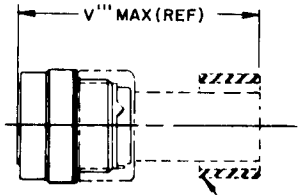

CRIMP SLEEVE NOT SUPPLIED WITH CONNECTOR

ASSEMBLED TO RFI BACKSHELL
(SEE NOTE 6)

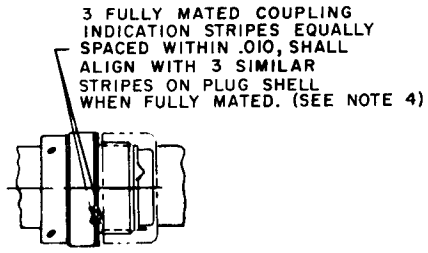

COUPLED POSITION

Size	A	F	R	S	V'''	Max weight in lbs. * Pin	Socket
8	.782 (19.86)	.887 (22.53)	.369 (9.37)	.363/.343 (9.22/8.71)	2.334 (59.28)	.0204 (.518)	.0216 (.549)
10	.926 (23.52)	.887 (22.53)	.497 (12.62)	.363/.343 (9.22/8.71)	2.334 (59.28)	.0406 (1.031)	.0421 (1.069)
12	1.043 (26.49)	.887 (22.53)	.614 (15.60)	.363/.343 (9.22/8.71)	2.334 (59.28)	.0505 (1.283)	.0536 (1.361)
14	1.183 (30.05)	.887 (22.53)	.739 (18.77)	.363/.343 (9.22/8.71)	2.334 (59.28)	.0639 (1.623)	.0692 (1.758)
16	1.305 (33.15)	.887 (22.53)	.864 (21.95)	.363/.343 (9.22/8.71)	2.334 (59.28)	.0788 (2.002)	.0880 (2.235)
18	1.391 (35.33)	.887 (22.53)	.969 (24.61)	.363/.343 (9.22/8.71)	2.334 (59.28)	.0864 (2.195)	.0957 (2.431)
20	1.531 (38.89)	.825 (20.96)	1.094 (27.79)	.425/.405 (10.80/10.29)	2.334 (59.28)	.1016 (2.581)	.1114 (2.830)
22	1.656 (42.06)	.825 (20.96)	1.219 (30.96)	.425/.405 (10.80/10.29)	2.334 (59.28)	.1241 (3.152)	.1363 (3.462)
24	1.777 (45.14)	.825 (20.96)	1.344 (34.14)	.425/.405 (10.80/10.29)	2.334 (59.28)	.1400 (3.556)	.1916 (4.867)

* Less contacts and accessories. Maximum weights do not apply to class S.

APPROVED 1 APR 71 REVISED (D) FOR CHANGES SEE PAGES 1,2,3, AND 4 12 Jul 85

User activities: Army - AV Navy - MC Air Force -
Review activities: Army - AR Navy - EC, SH Air Force - 11, 17, 99
This military standard is approved for use by all Departments and Agencies of the Department of Defense. Selection for all new engineering and design applications and for repetitive use shall be made from this document when applicable.

INCHES	MM	INCHES	MM
.008	0.20	.101	2.57
.010	0.25	.107	2.72
.025	0.64	.187	4.75
.029	0.74	.200	5.08
.032	0.81	.218	5.54
.042	1.07	.225	5.72
.045	1.14	.269	6.83
.046	1.17	.320	8.13
.065	1.66	.337	8.56
.069	1.75	.357	9.07
.087	2.21	.399	10.13
.097	2.46	.419	10.64
		1.230	31.24

TABLE I. Reduced diameters (XX).

Shell size	Insert arrangements	Contact cavities
8	-33 & -98	A, B, C
12	-10	C, G
14	-12	A, B, C, D, E, F, G, H
14	-18	A, C, E, G, J, L
14	-19	B, D, F, H, K, M
16	-26	A, B, C, D, E, F, G, H, J K, L, M, N, P, R
18	-32	A, B, C, D, E, F, G, H, J, K, L, M, N, P, R, S, T
22	-41	A, B, C, D, E, F, G, H, J, K, L, M, N, P, R, S, T, U, V, W, X, Y

Connector part numbering

MS3475 L 24 - 61 P W

- MS number — MS3475
- Class — L
- Shell size — 24
- Insert arrangement — 61
- Contact style — P
- Insert position — W

User activities: Army - AV, Navy - MC, Air Force -

Review activities: Army - AR, Navy - EC, SH, Air Force - 11, 17, 99

This military standard is approved for use by all Departments and Agencies of the Department of Defense. Selection for all new engineering and design applications and for repetitive use shall be made from this document when applicable.

APPROVED 1 APR 71 REVISED D FOR CHANGES SEE PAGES 1, 2, 3, AND 4 12 Jul 85

FED. SUP CLASS
5935

NOTES:
1. Dimensions are in inches.
2. Unless otherwise specified, tolerances are ±.005 (0.13 mm) for three place decimals and ±.01 (0.3 mm) for two place decimals, and angular tolerances are ±0° ±1° and 0° 0' ±30'.
3. Color band: .070 ±.031 wide, color blue.
4. Coupling indication indicator, color optional.
5. Connector assembly must be used with a backshell. Backshell must be procured separately. See MIL-C-85049 for applicable backshells.
6. Insert arrangements requiring reduced diameters for raised seal barriers or lead-in chamfer on outer row of contact cavities as indicated. (See table I).
7. Intermateability and rear accessory interchangeability dimensions shall be in accordance with MIL-C-26482.
8. For insert arrangements see MIL-STD-1669.
9. Connector identification marking shall be in accordance with MIL-C-26482. Example: MS3475 L----, M83723-42 R---- (minimum height does not apply to shell sizes 8, 10 and 12.)
10. Class E cancelled and replaced by class L.
11. The complete requirements for procuring this connector described herein shall consist of this document and the issue in effect of MIL-C-26482.
12. For design feature purposes, this standard takes precedence over procurement documents referenced herein.
13. Referenced documents shall be of the issue in effect on date of invitations for bids.
14. Metric equivalents are given for general information only.

APPROVED 1 APR 71 REVISED (D) FOR CHANGES SEE PAGES 1,2,3,AND 4 12 Jul 85

User activities: Army - AV Navy - MC Air Force -

Review activities: Army - AR Navy - EC, SH Air Force - 11, 17, 99

This military standard is approved for use by all Departments and Agencies of the Department of Defense. Selection for all new engineering and design applications and for repetitive use shall be made from this document when applicable.

P.A ARMY-CR Other Cust NAVY-AS AF-85	International interest	TITLE CONNECTORS, PLUG ELECTRIC, RFI SHIELDED, SERIES 2, CRIMP TYPE, BAYONET COUPLING, CLASSES L, S, AND W	MILITARY STANDARD MS 3475
Procurement Specification MIL-C-26482		SUPERSEDES: MS 3475 (NAVY) MIL-C-83723/42A MIL-C-83723/43A	PAGE 4 OF 4

DD FORM 1 MAY 73 672 (Coordinated) PREVIOUS EDITIONS OF THIS FORM ARE OBSOLETE.

☆U.S. GOVERNMENT PRINTING OFFICE: 1985 — 505-038/23255