FED SUP CLASS
5120

A 18,75

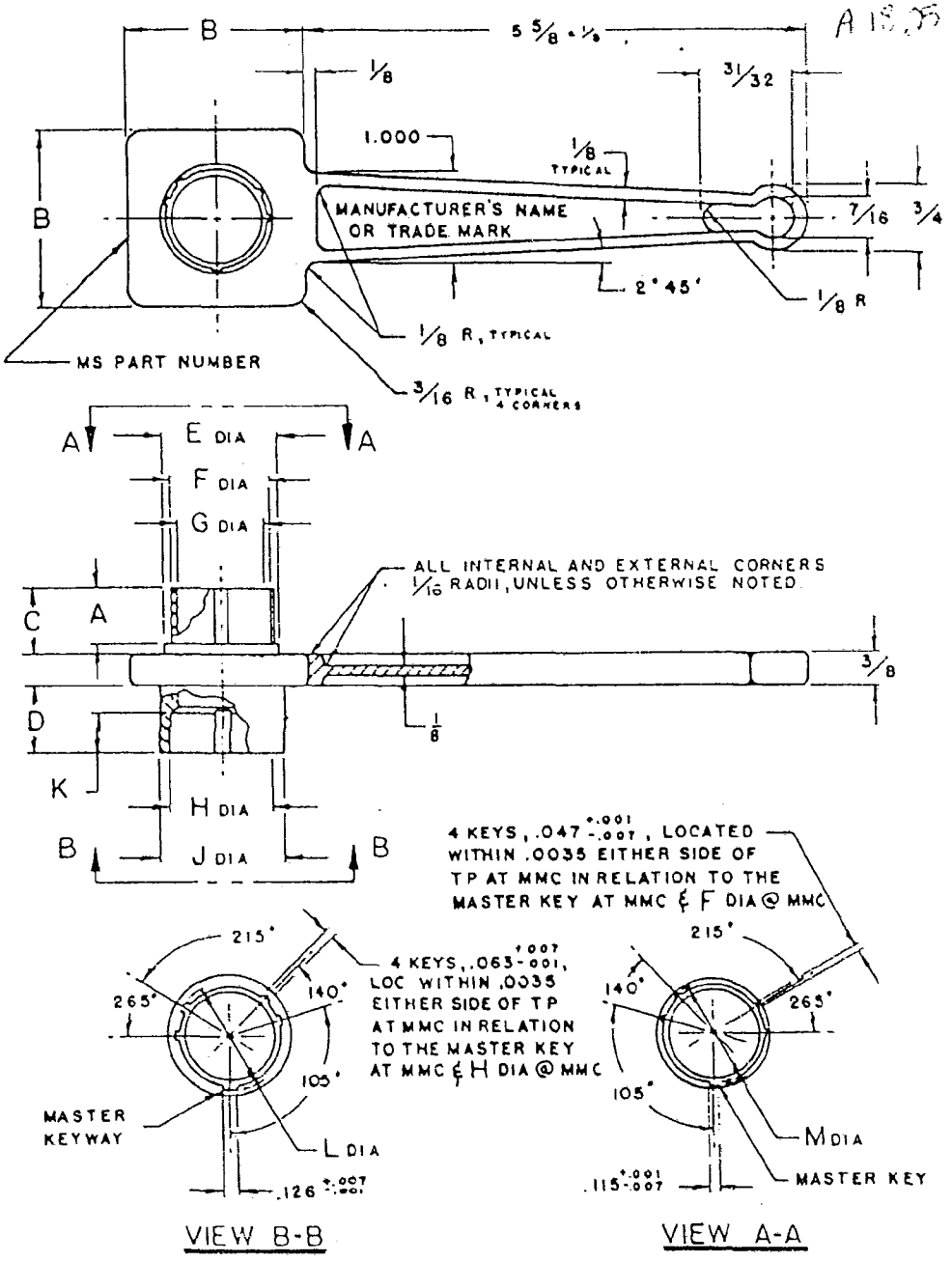

APPROVED 21 Jan 1970 REVISED

P.A. NAVY - AS Other Cust	TITLE TOOL, CONNECTOR ASSEMBLY; FOR MIL-C-26482 CONNECTORS	MILITARY STANDARD MS3481 (NAVY)
PROCUREMENT SPECIFICATION NONE	SUPERSEDES	SHEET 1 OF 2

DD FORM 1 OCT 55 672-1 (Limited coordination)

DASH NUMBER	CONNECTOR SHELL SIZE	A ±.030	B ±.060	C APPROX	D APPROX	E DIA APPROX	F DIA +.001 −.005	G DIA MIN	H DIA +.005 −.001	J DIA +.001 −.005	K MIN	L DIA +.005 −.006	M DIA +.001 −.010
−08	8	.380	1.250	.410	.455	.473	.357	.292	.362	.473	.281	.412	.402
−10	10					.590	.485	.409	.490	.590		.540	.530
−12	12					.750	.597	.523	.607	.750		.689	.679
−14	14					.875	.722	.648	.732	.875		.814	.804
−16	16		2.000			1.000	.847	.772	.857	1.000		.939	.929
−18	18					1.125	.947	.862	.962	1.125		1.039	1.029
20	20	.425		.495	.540	1.250	1.072	.987	1.087	1.250	.343	1.164	1.154
−22	22					1.375	1.197	1.111	1.212	1.375		1.289	1.279
−24	24					1.500	1.322	1.237	1.337	1.500		1.414	1.404

REQUIREMENTS:

1. TOOLS ARE FOR USE WITH CONNECTORS CONFORMING TO MIL-C-26482.
2. PART NUMBER SHALL INCLUDE: MS PART NUMBER AND DASH NUMBER AS SHOWN IN THE EXAMPLE BELOW.

MS 3481 — 24

MS NUMBER — DASH NUMBER

NOTES:

1. MATERIAL: a. SHELL; HIGH GRADE ALUMINUM ALLOY.
   b. HANDLE; DIE CAST ALUMINUM ALLOY PER QQ-A-591.
2. FINISH: NICKEL PLATE PER QQ-N-290
3. REMOVE ALL BURRS AND SHARP EDGES.
4. ALL DIMENSIONS ARE INCHES, UNLESS OTHERWISE SPECIFIED, TOLERANCES: FRACTIONS $\pm \frac{1}{16}$, ANGLES: TP
   DECIMALS ±.016

FOR DESIGN FEATURE PURPOSES, THIS STANDARD TAKES PRECEDENCE OVER PROCUREMENT DOCUMENTS REFERENCED HEREIN.

REFERENCED DOCUMENTS SHALL BE OF THE ISSUE IN EFFECT ON DATE OF INVITATIONS FOR BID.

APPROVED 21 Jan 1979 REVISED

P.A. NAVY - AS
Other Cust

PROCUREMENT SPECIFICATION
NONE

TITLE
TOOL, CONNECTOR ASSEMBLY; FOR MIL-C-26482 CONNECTORS

SUPERSEDES

MILITARY STANDARD
MS3481(NAVY)

SHEET 2