This standard has been approved by the Department of the USAF and is mandatory for use by that activity. All other military activities are required to employ this standard where suitable.

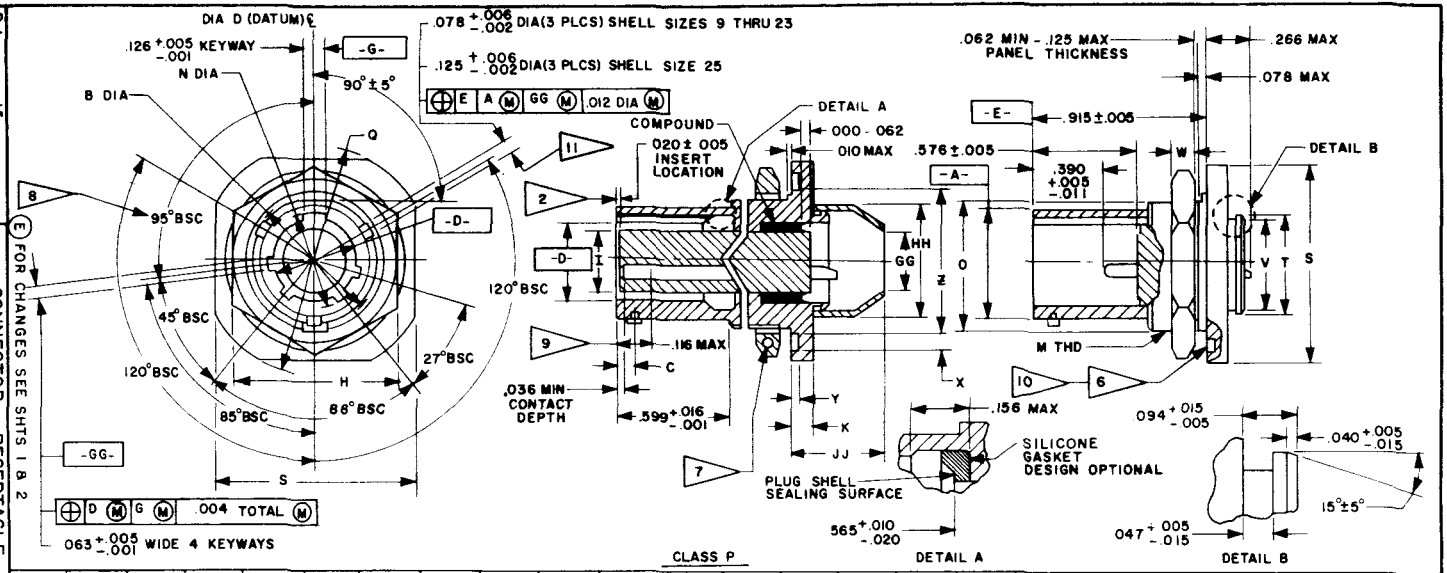

CLASS P

SHELL SIZE	A DIA +.001 -.005	B DIA +.000 -.016	C BSC	D DIA +.005 -.001	H HEX +.017 -.016	I DIA ±.005		CC	K +.011 -.010	M THD (PLATED) CLASS 2A	N DIA +.005 -.006	O DIA +.000 -.010	Q DIA ±.016	S ±.016	T DIA +.011 -.000	V DIA ±.011	W +.017 -.000	X +.005 -.001	Y ±.005	Z DIA +.006 -.005	FOR INSERT ARR. SEE DRAWING MS
9	.572	.662		.442	.875	.296				.6875-24UNEF	.492	.653	1.188	1.062	.516	.476				.777	20049
11	.700	.810		.570	1.000	.413				.8125-20UNEF	.620	.755	1.375	1.250	.642	.602				.965	20050
13	.850	.960		.687	1.188	.527			.109	1.0000-20UNEF	.769	.942	1.500	1.375	.766	.726		.094		1.090	20051
15	.975	1.085	100	.812	1.312	.652		.010		1.1250-18UNEF	.894	1.066	1.625	1.500	.892	.852	.125		.045	1.215	20052
17	1.100	1.210		.937	1.438	.777				1.2500-18UNEF	1.019	1.191	1.750	1.625	1.018	.978				1.340	20053
19	1.207	1.317		1.042	1.562	.866				1.3750-18UNEF	1.124	1.316	1.938	1.812	1.142	1.102				1.449	20054
21	1.332	1.442		1.167	1.688	.991			.140	1.5000-18UNEF	1.249	1.441	2.062	1.938	1.268	1.228		.141	.075	1.574	20055
23	1.457	1.567		1.292	1.812	1.116				1.6250-18UNEF	1.374	1.566	2.188	2.062	1.392	1.352				1.699	20056
25	1.582	1.692	.109	1.417	2.000	1.241				1.7500-18UNS	1.499	1.691	2.312	2.188	1.518	1.478				1.824	20057

1. DIMENSIONS ARE IN INCHES
2. INSERT FRONT SURFACE SHALL BE FLAT WITHIN .005 T.I.R.
3. DIAMETERS A, D, M, Q, & Z SHALL BE CONCENTRIC WITHIN .015 T.I.R.
4. DIAMETERS D & I SHALL BE CONCENTRIC WITHIN .005 T.I.R. AT M M.C.
5. DIAMETER A WITH RESPECT TO DIAMETER B, & DIAMETER D WITH RESPECT TO DIAMETER N, SHALL BE CONCENTRIC AT M.M.C.
6. SIDES OF GROOVE MAY HAVE 5° MAX TAPER.
7. .062 ± .005 DIA., 3 LOCKWIRE HOLES, SHELL SIZES 9 THRU 25
8. NORMAL KEYWAY POSITION. FOR OTHER KEYWAY POSITIONS, SEE TABLE A, FIGURE 2 OF PROCUREMENT SPECIFICATION.

(E) EXAMPLE OF PART NUMBER: MS20029 P 13 A 98 P A

MS NO. | CLASS | SHELL SIZE | FINISH (COLOR) | INSERT ARR. NUMBER | STYLE (P OR S) | POLARIZATION NO LETTER REQUIRED FOR NORMAL

THIS STANDARD TAKES PRECEDENCE OVER DOCUMENTS REFERENCED HEREIN. REF. DOCUMENTS SHALL BE OF THE ISSUE IN EFFECT ON DATE OF INVITATIONS FOR BID.

APPROVED 22 JAN 65 REVISED (A) 2 APR 65 (B) 11 JAN 66 (C) 9 AUG 66 (D) ENTIRE STD REDRAWN 1 FEB 67 (E) 20 DEC 67

FED. SUP CLASS 5935

P.A. 15
Other Cust (E)

PROCUREMENT SPECIFICATION MIL-C-27599 (USAF)

SUPERSEDES:

(E) FOR CHANGES SEE SHTS 1 & 2

TITLE CONNECTOR, RECEPTACLE, ELECTRIC, JAM NUT MOUNTING, SOLDER TYPE, BAYONET COUPLING

MILITARY STANDARD

MS20029

SHEET 1 OF 2

DD FORM 1 SEP 63 672-1 (Limited coordination)

EDITION OF 1 SEP 57 MAY BE USED

FED. SUP CLASS
5935

SHELL SIZE	GG DIA MIN	HH DIA MAX	JJ MAX	RECOMMENDED PACKING "O" RING 10
9	.317	.625		MS9021-019
11	.434	.750		-022
13	.548	.875	.688	-024
15	.673	1.000		-026
17	.798	1.125		-028
19	.899	1.250	.719	-128
21	1.024	1.375		-130
23	1.149	1.500	.812	-132
25	1.274	1.625		-134

9 THE POINT AT WHICH A GAGE PIN HAVING THE SAME BASIC DIAMETER AS THE MATING CONTACT AND A SQUARE FACE TOUCHES SOCKET CONTACT SPRING.

10 RECOMMENDED PACKING IS FOR DIMENSIONS ONLY. MATERIAL IS OPTIONAL.

11 THE GAGE FEATURES FOR GG SHALL BE CC SMALLER THAN THEIR MMC SIZE AT BASIC LOCATION.

APPROVED 22 JAN 65 REVISED (B) 11 JAN 66 (C) ENTIRE STD REDRAWN 1 FEB 67 (E) FOR CHANGES SEE SHTS 1 & 2.

This standard has been approved by the Department of the USAF and is mandatory for use by that activity. All other military activities are required to employ this standard where suitable.

P.A. 15 Other Cust (E)	TITLE CONNECTOR, RECEPTACLE, ELECTRIC, JAM NUT MOUNTING, SOLDER TYPE, BAYONET COUPLING	MILITARY STANDARD MS20029
PROCUREMENT SPECIFICATION MIL-C-27599 (USAF)	SUPERSEDES:	SHEET 2 OF 2