This standard has been approved by the Department of the USAF and is mandatory for use by that activity. All other military activities are required to employ this standard where suitable.

NOTICE.—When Government drawings, specifications, or other data are used for any purpose other than in connection with a definitely related Government procurement operation, the United States Government thereby incurs no responsibility, nor any obligation whatsoever; and the fact that the Government may have formulated, furnished, or in any way supplied the said drawings, specifications, or other data is not to be regarded by implication or otherwise as in any manner licensing the holder or any other person or corporation, or conveying any rights or permission to manufacture, use, or sell any patented invention that may in any way be related thereto.

P.A. 15
Other Cust

PROCUREMENT SPECIFICATION
MIL-C-27599 (USAF)

SUPERSEDES:

TITLE

CONNECTOR, RECEPTACLE, ELECTRIC, SOLDER TYPE, WALL MOUNTING FLANGE, BAYONET COUPLING

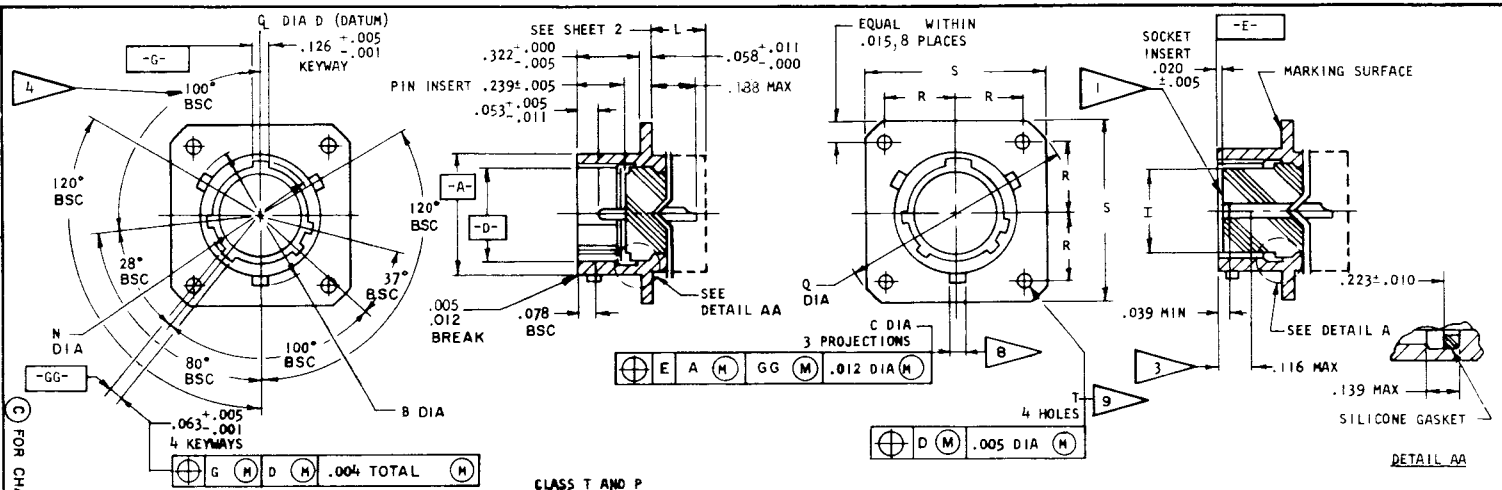

(C) FOR CHANGES SEE SHEET 1

CLASS T AND P

SHELL SIZE	A +.001 -.005 DIA	B +.000 -.016 DIA OVER PROJ	C +.006 -.002 DIA	D +.005 -.001 DIA	I ±.005 DIA	N +.005 -.006 DIA	Q MAX	R BSC	S MAX	T +.010 -.005	CC	FOR INSERT ARR. SEE DWG MS
8	.473	.563	.078	.362	.296	.412	1.078	.297	.828	.120	.004	27343
10	.590	.680		.490	.413	.540	1.266	.3595	.954		.010	27344
12	.750	.859		.607	.527	.689	1.391	.406	1.047			27345
14	.875	.984		.732	.652	.814	1.516	.453	1.141			27346
16	1.000	1.108		.857	.777	.939	1.641	.4845	1.234			27347
18	1.125	1.233		.962	.866	1.039	1.766	.531	1.328			27348
20	1.250	1.358	.125	1.087	.991	1.164	1.891	.578	1.453			27349
22	1.375	1.483		1.212	1.116	1.289	2.016	.625	1.578			27350
24	1.500	1.610		1.337	1.241	1.414	2.204	.6875	1.703	.147		27351

NOTES:

1. INSERT FRONT SURFACE SHALL BE FLAT WITHIN .005 T.I.R.
2. DIMENSIONS IN INCHES.
3. THE POINT AT WHICH A GAGE PIN, HAVING THE SAME BASIC DIAMETER AS THE MATING CONTACT AND A SQUARE FACE, TOUCHES SOCKET CONTACT SPRING.
4. NORMAL KEYWAY POSITION. FOR OTHER KEYWAY POSITIONS SEE TABLE A, FIGURE 2 OF PROCUREMENT SPECIFICATION.
5. DIAMETERS A AND D SHALL BE CONCENTRIC WITHIN .015 T.I.R.
6. DIAMETER A WITH RESPECT TO DIAMETER B, AND DIAMETER D WITH RESPECT TO DIAMETER N, SHALL BE CONCENTRIC AT MMC.
7. DIAMETERS D AND I SHALL BE CONCENTRIC WITHIN .005 T.I.R. AT MMC.
8. THE GAGE FEATURES FOR GG SHALL BE CC SMALLER THAN THEIR MMC SIZE AT BASIC LOCATION.
9. THE GAGE FEATURES FOR GG SHALL BE .010 SMALLER THAN THEIR MMC SIZE AT BASIC LOCATION.

EXAMPLE OF PART NUMBER: (C)

MS27334 T 24 A 61 P A

MS NO. — CLASS — SHELL SIZE — FINISH (COLOR) — INSERT ARR. NUMBER — STYLE (P OR S) — POLARIZATION NO LETTER REQUIRED FOR NORMAL

THIS STANDARD TAKES PRECEDENCE OVER DOCUMENTS REFERENCED HEREIN.
REFERENCED DOCUMENTS SHALL BE OF THE ISSUE IN EFFECT ON DATE OF INVITATIONS FOR BID.

APPROVED 26 JAN 66 REVISED (A) 10 AUG 66 (B) 1 FEB 67 (C) 20 DEC 67

MILITARY STANDARD

MS27334(USAF)

FED. SUP. CLASS 5935

DD FORM 1 SEP 67 672-1 (Limited coordination)

PREVIOUS EDITIONS OF THIS FORM ARE OBSOLE

This standard has been approved by the Department of the USAF and is mandatory for use by that activity. All other military activities are required to employ this standard where suitable.

P.A. 15
Other Cust

PROCUREMENT SPECIFICATION
MIL-C-27599 (USAF)

SUPERSEDES:

TITLE
CONNECTOR, RECEPTACLE, ELECTRIC, SOLDER TYPE, WALL MOUNTING FLANGE, BAYONET COUPLING

MILITARY STANDARD
MS27334(USAF)

SHEET 2 OF 2

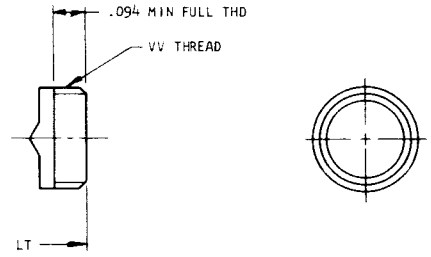

CLASS T

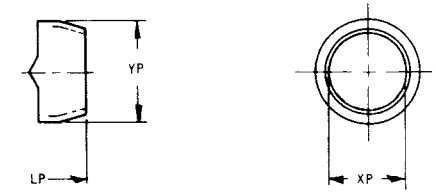

CLASS P

SHELL SIZE	LT MAX	VV THREAD UNEF-2A MOD (PLATED) SIZE	MAJOR DIA MOD				LP MAX	XP MIN DIA	YP MAX DIA	
8	.250	7/16-28	.421-.417				.453	.317	.531	
10		9/16-24	.542-.538					.434	.641	
12		11/16-24	.667-.663					.548	.766	
14		13/16-20	.791-.787					.673	.891	
16		15/16-20	.916-.912					.798	1.016	
18		1 1/16-18	1.034-1.030					.899	1.125	
20		1 3/16-18	1.158-1.154					1.024	1.250	
22		1 5/16-18	1.283-1.279					1.149	1.375	
24	.328	1 7/16-18	1.408-1.404				.531	1.274	1.500	

FED. SUP CLASS
5935

APPROVED 26 JAN 66 REVISED (A) 10 AUG 66 (B) FOR CHANGES SEE SHEET 1 (C) FOR CHANGES SEE SHEET 1

DD FORM 1 SEP 61 672-1 (Limited coordination)
EDITION OF 1 SEP 57 MAY BE USED
☆ U. S. GOVERNMENT PRINTING OFFICE: 1968-301-517/4535