This standard has been approved by the Department of the USAF and is mandatory for use by that activity. All other military activities are required to employ this standard where suitable.

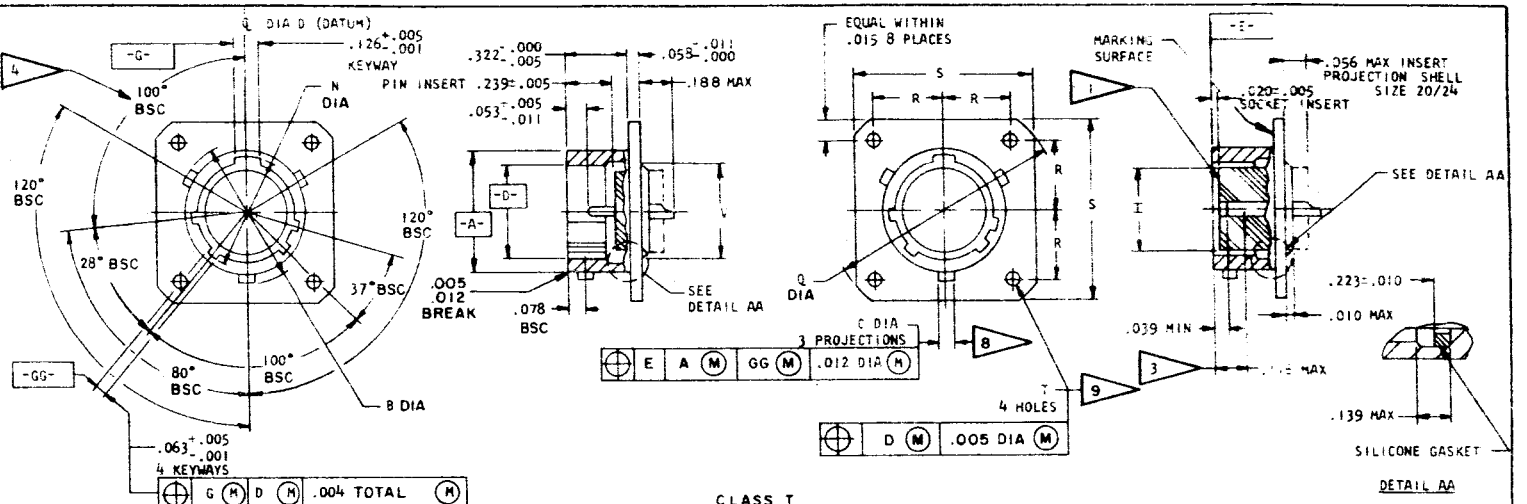


CLASS T

| SHELL SIZE | A +.001 -.005 DIA | B +.000 -.016 DIA OVER PROJ | C +.006 -.002 DIA | D +.005 -.001 DIA | I ±.005 DIA | N +.005 -.006 DIA | Q MAX DIA | R BSC | S MAX | T +.010 -.005 | V MAX DIA | CC | FOR INSERT ARR. SEE DWG MS |
|---|---|---|---|---|---|---|---|---|---|---|---|---|---|
| 8 | .473 | .563 | | .362 | .296 | .412 | 1.078 | .297 | .828 | | .406 | .004 | 27343 |
| 10 | .590 | .680 | | .490 | .413 | .540 | 1.266 | .3595 | .954 | | .516 | | 27344 |
| 12 | .750 | .859 | .078 | .607 | .527 | .689 | 1.391 | .406 | 1.047 | .120 | .640 | | 27345 |
| 14 | .875 | .984 | | .732 | .652 | .814 | 1.516 | .453 | 1.141 | | .766 | .010 | 27346 |
| 16 | 1.000 | 1.108 | | .857 | .777 | .939 | 1.641 | .4845 | 1.234 | | .890 | | 27347 |
| 18 | 1.125 | 1.233 | | .962 | .866 | 1.039 | 1.766 | .531 | 1.328 | | .984 | | 27348 |
| 20 | 1.250 | 1.358 | | 1.087 | .991 | 1.164 | 1.891 | .578 | 1.453 | | 1.109 | | 27349 |
| 22 | 1.375 | 1.483 | .125 | 1.212 | 1.116 | 1.289 | 2.016 | .625 | 1.578 | | 1.234 | | 27350 |
| 24 | 1.500 | 1.610 | | 1.337 | 1.241 | 1.414 | 2.204 | .6875 | 1.703 | .147 | 1.359 | | 27351 |

NOTES:

1. INSERT FRONT SURFACE SHALL BE FLAT WITHIN .005 T.I.R.
2. DIMENSIONS IN INCHES.
3. THE POINT AT WHICH A GAGE PIN, HAVING THE SAME BASIC DIAMETER AS THE MATING CONTACT AND A SQUARE FACE, TOUCHES SOCKET CONTACT SPRING.
4. NORMAL KEYWAY POSITION. FOR OTHER KEYWAY POSITIONS SEE TABLE A, FIGURE 2 OF PROCUREMENT SPECIFICATION.
5. DIAMETERS A AND D SHALL BE CONCENTRIC WITHIN .015 T.I.R.
6. DIAMETER A WITH RESPECT TO DIAMETER B, AND DIAMETER D WITH RESPECT TO DIAMETER N, SHALL BE CONCENTRIC AT MMC.
7. DIAMETERS D AND I SHALL BE CONCENTRIC WITHIN .005 T.I.R. AT MMC.
8. THE GAGE FEATURES FOR GG SHALL BE CC SMALLER THAN THEIR MMC AT BASIC LOCATION.
9. THE GAGE FEATURES FOR GG SHALL BE .010 SMALLER THAN THEIR MMC AT BASIC LOCATION

THIS STANDARD TAKES PRECEDENCE OVER DOCUMENTS REFERENCED HEREIN.
REFERENCED DOCUMENTS SHALL BE OF THE ISSUE IN EFFECT ON DATE OF INVITATIONS FOR BID.

(C) EXAMPLE OF PART NUMBER
MS27335 T 24 A 61 P A

MS NO. | CLASS | SHELL SIZE | FINISH (COLOR) | INSERT ARR. NUMBER | STYLE (P OR S) | POLARIZATION NO LETTER REQUIRED FOR NORMAL

APPROVED 26 JAN 66 REVISED (A) 10 AUG 66 (B) 1 FEB 67 (C) 20 DEC 67

FED. SUP CLASS 5935

P A
Other Cust (C) 15

PROCUREMENT SPECIFICATION MIL-C-27599 (USAF)

TITLE
CONNECTOR, RECEPTACLE, ELECTRIC, BOX, FLANGE MOUNT, SOLDER TYPE, BAYONET COUPLING

SUPERSEDES

MILITARY STANDARD
MS27335
SHEET 1 OF 1

DD FORM 1 SEP 57 672-1 (Limited Coordination)

☆ U. S. GOVERNMENT PRINTING OFFICE: 1968-301-518/5189