This military standard is approved for use by the Engineering and Technical Support Division, AFLC 85, Department of the Air Force, and is available for use by all Departments and Agencies of the Department of Defense.

Review activities:
AF-80

User activities:

P.A AF - 85 (E)

Other Cust

International interest

Procurement Specification
MIL-C-27599(USAF)

TITLE
CONNECTOR, PLUG, ELECTRIC, SOLDER TYPE, STRAIGHT, BAYONET COUPLING

SUPERSEDES:

MILITARY STANDARD

MS27336(USAF)

Sheet 1 OF 3

DD FORM 1 MAY 73 672 (Limited coordinated) PREVIOUS EDITIONS OF THIS FORM ARE OBSOLETE.

5935-F989

(E) denotes changes

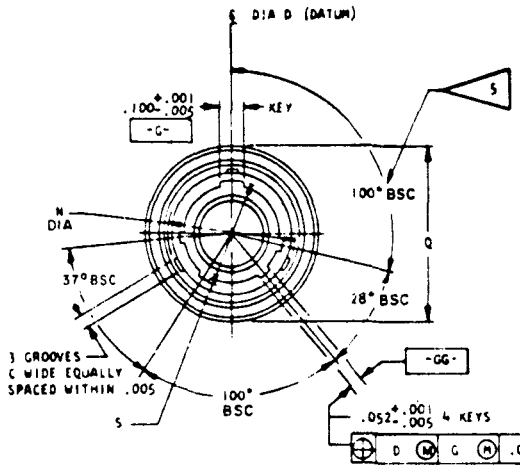

CLASS T AND P

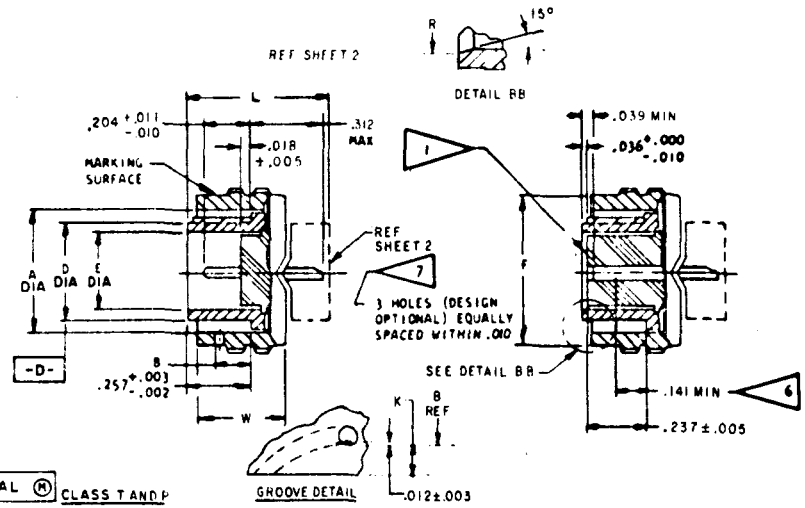

SHELL SIZE	A +.005 -.001 DIA	B ±.020	C +.015 -.001	D +.001 -.005 DIA	E MIN DIA	F +.000 -.006 DIA	K MAX REF	N +.010 -.006 DIA	Q MAX DIA	R +.005 -.006 DIA	S +.001 -.010	W ±.015
8	.481			.357	.306	.630		.576	.750	.316	.402	
10	.602			.485	.423	.752		.697	.859	.436	.530	
12	.761	.096	.090	.597	.537	.925	.155	.871	1.031	.549	.679	.547
14	.935			.722	.662	1.050		.995	1.156	.675	.804	
16	1.010			.847	.787	1.172		1.120	1.281	.799	.929	
18	1.136			.947	.876	1.304		1.245	1.406	.893	1.029	
20	1.260			1.072	1.001	1.435		1.370	1.531	1.018	1.154	
22	1.385	.123	.137	1.197	1.126	1.560	.109	1.495	1.641	1.143	1.279	.524
24	1.510			1.322	1.251	1.688		1.624	1.766	1.268	1.404	.575

(E)

EXAMPLE OF PART NUMBER
MS27336 T 24 A 61 P A

MS NO. — CLASS — SHELL SIZE — FINISH (COLOR) — INSERT ARR. NUMBER — STYLE (P OR S) — POLARIZATION NO LETTER REQUIRED FOR NORMAL

FED. SUP CLASS 5935

APPROVED 26 Jan 66 REVISED (E) 14 Jan 75

This military standard is approved for use by the Engineering and Technical Support Division, AFLC 85, Department of the Air Force, and is available for use by all Departments and Agencies of the Department of Defense.

Review activities: AF-30

User activities:

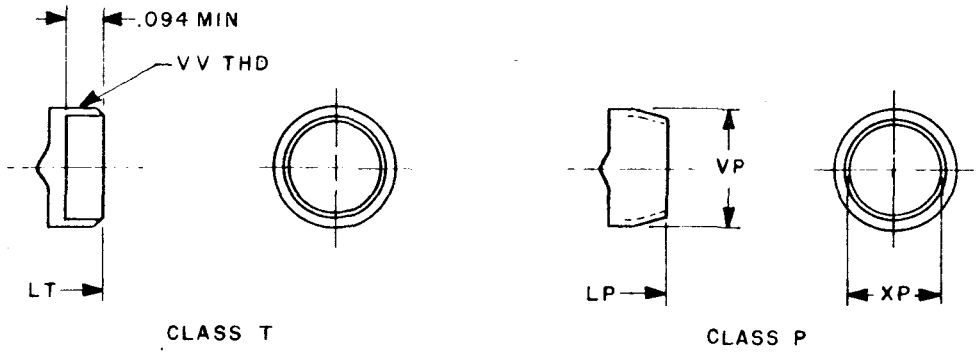

SHELL SIZE	LT MAX OVER-ALL LENGTH	VV THREAD UNEF 2A MOD (PLATED)	
		SIZE	MAJOR DIA MOD
8	.625	.4375-28	.421-.417
10		.5625-24	.542-.538
12		.6875-24	.667-.663
14		.8125-20	.791-.787
16		.9375-20	.916-.912
18		1.0625-18	1.034-1.030
20		1.1875-18	1.158-1.154
22		1.3125-18	1.283-1.279
24	.703	1.4375-18	1.408-1.404

LP MAX OVER-ALL LENGTH	XP MIN	VP MAX
.797	.317	.531
	.434	.641
	.548	.766
	.673	.891
	.798	1.016
	.899	1.125
	1.024	1.250
	1.149	1.375
.875	1.274	1.500

FED. SUP CLASS 5935

APPROVED 26 Jan 66

REVISED (E) For changes see sheets, 2 & 3

P.A AF - 85 (E)

Other Cust

International interest

Procurement Specification MIL-C-27599(USAF)

TITLE CONNECTOR, PLUG, ELECTRIC, SOLDER TYPE, STRAIGHT, BAYONET COUPLING

SUPERSEDES:

MILITARY STANDARD

MS 27336(USAF)

Sheet 2 OF 3

DD FORM 1 MAY 73 672 (Limited coordinated) PREVIOUS EDITIONS OF THIS FORM ARE OBSOLETE.

This military standard is approved for use by the Engineering and Technical Support Division, AFLC 85, Department of the Air Force, and is available for use by all Departments and Agencies of the Department of Defense.

Review activities:

AF-80

User activities:

INCHES	MM	INCHES	MM	INCHES	MM	INCHES	MM	INCHES	MM	INCHES	MM	INCHES	MM
.001	.025	.109	2.77	.485	12.32	.673	17.09	.876	22.25	1.050	26.67	1.281	32.54
.002	.051	.123	3.12	.524	13.31	.675	17.14	.885	22.48	1.072	27.23	1.283	32.59
.003	.076	.137	3.48	.530	13.46	.679	17.25	.891	22.63	1.120	28.45	1.304	33.12
.004	.10	.141	3.58	.531	13.49	.697	17.70	.893	22.68	1.125	28.58	1.322	33.58
.005	.13	.155	3.94	.537	13.64	.703	17.86	.899	22.83	1.126	28.60	1.370	34.80
.006	.15	.204	5.18	.538	13.66	.722	18.34	.912	23.16	1.136	28.85	1.375	34.92
.008	.20	.237	6.02	.542	13.77	.750	19.05	.916	23.27	1.143	29.03	1.385	35.18
.010	.25	.254	6.45	.547	13.89	.752	19.10	.925	23.50	1.149	29.18	1.404	35.66
.011	.28	.306	7.77	.548	13.92	.761	19.33	.929	23.60	1.154	29.31	1.406	35.71
.012	.30	.312	7.92	.549	13.94	.766	19.46	.947	24.06	1.156	29.36	1.408	35.76
.015	.38	.316	8.03	.575	14.60	.787	19.99	.995	25.27	1.158	29.41	1.435	36.45
.018	.46	.317	8.05	.576	14.63	.791	20.09	1.001	25.42	1.172	29.77	1.495	37.97
.020	.51	.357	9.07	.597	15.14	.797	20.24	1.010	25.65	1.197	30.40	1.500	38.10
.036	.91	.402	10.21	.602	15.29	.798	20.27	1.016	25.81	1.245	31.62	1.510	38.35
.039	.99	.417	10.59	.625	15.88	.799	20.29	1.018	25.86	1.250	31.75	1.531	38.89
.052	1.32	.421	10.69	.630	16.00	.804	20.42	1.024	26.01	1.251	31.78	1.560	39.62
.090	2.29	.423	10.74	.641	16.28	.847	21.51	1.029	26.14	1.260	32.00	1.624	41.25
.094	2.39	.434	11.02	.662	16.81	.859	21.82	1.030	26.16	1.268	32.21	1.641	41.68
.096	2.44	.436	11.07	.663	16.84	.871	22.12	1.031	26.19	1.274	32.36	1.688	42.88
.100	2.54	.481	12.22	.667	16.94	.875	22.23	1.034	26.26	1.279	32.49	1.766	44.86

NOTES:

1. Insert front surface shall be flat within .005 (.13 mm) T.I.R.
2. Diameter D with respect to diameter S shall be concentric at MMC.
3. Diameter A and N shall be concentric within .008 (.20 mm) T.I.R.
4. Dimensions are in inches.
5. Normal keyway position. For other keyway positions see Table A, Figure 2 of procurement specification.
6. The point at which a gage pin, having the same basic diameter as the mating contact and a square face, touches socket contact spring.
7. Holes shall be provided for visual inspection of lock when mated with receptacle.
8. (E) This standard takes precedence over documents referenced herein.
9. (E) Referenced documents shall be of the issue in effect on date of invitations for bid.
10. For insert arrangements see MIL-STD-1560.

FED. SUP CLASS 5935

APPROVED 26 Jan 66 REVISED (E) For changes see sheets, 1, 2 & 3

DD FORM 1 MAY 73 672 (Limited coordinated) PREVIOUS EDITIONS OF THIS FORM ARE OBSOLETE.

Procurement Specification MIL-C-27599(USAF)

Other Cust

P.A AF - 85 (E)

International Interest

SUPERSEDES:

TITLE CONNECTOR, PLUG, ELECTRIC, SOLDER TYPE, STRAIGHT, BAYONET COUPLING

MILITARY STANDARD

MS27336(USAF)

Sheet 3 OF 3