This standard has been approved by the Department of the USAF and is mandatory for use by that activity. All other military activities are required to employ this standard where suitable.

NOTICE — When Government drawings, specifications, or other data are used for any purpose other than in connection with a definitely related Government procurement operation, the United States Government thereby incurs no responsibility, nor any obligation whatsoever; and the fact that the Government may have formulated, furnished, or in any way supplied the said drawings, specifications, or other data is not to be regarded by implication or otherwise as in any manner licensing the holder or any other person or corporation, or conveying any rights or permission to manufacture, use, or sell any patented invention that may in any way be related thereto.

DD FORM SEP 67 672-1 (Limited coordination)

PROCUREMENT SPECIFICATION MIL-C-27599 (USAF) SUPERSEDES

Other Cust

P A 15

TITLE © FOR CHANGES SEE SHT 1

CONNECTOR, RECEPTACLE, ELECTRIC, JAM NUT MOUNTING, SOLDER TYPE, BAYONET COUPLING

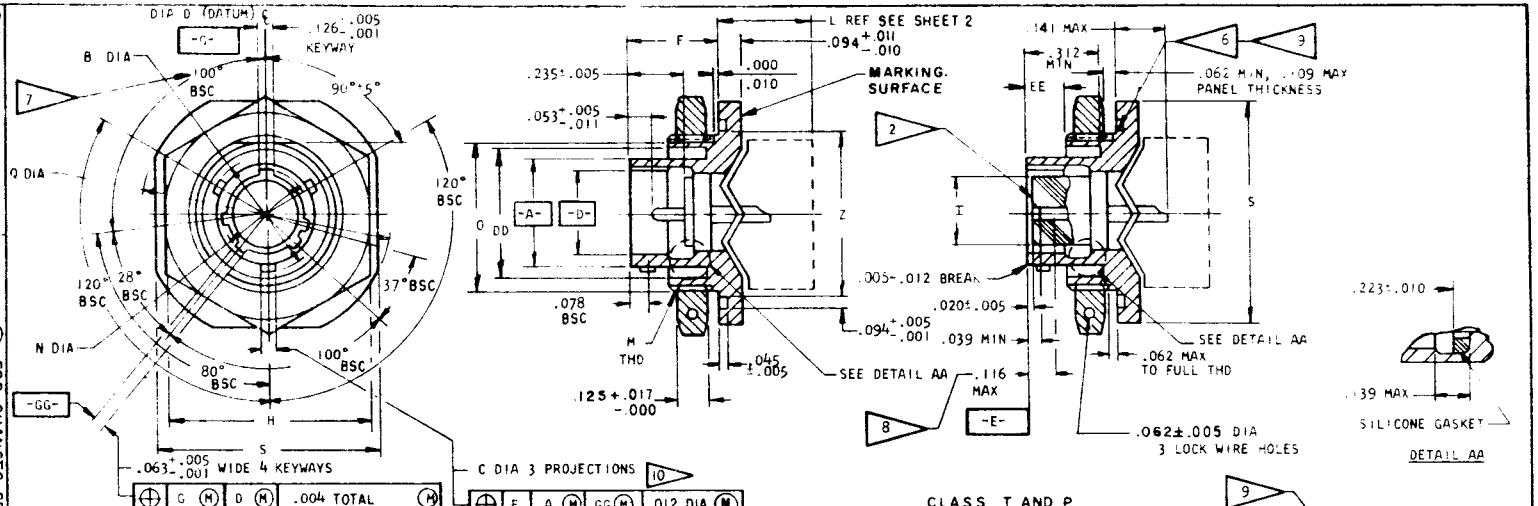

CLASS T AND P

SHELL SIZE	A -.001 -.005 DIA	B -.000 -.016 DIA OVER PROJ	C -.006 -.002 DIA	D -.005 -.001 DIA	F ±.005	H -.017 -.016 HEX	I ±.005 DIA		M THREAD (PLATED) CLASS 2A	N -.005 -.006 DIA	O -.001 -.006 FLAT	Q ±.016 DIA	S ±.016		Z -.006 -.005 DIA	CC	DD MIN DIA	EE -.005 -.000	RECOMMENDED PACKING ("O" RING)	FOR INSERT ARR. SEE DWG MS
8	.473	.563		.362		1.062	.296		7/8-20 UNEF	.412	.817	1.375	1.250		.965	.004	.678		MS9021-022	27343
10	.590	.680		.490		1.188	.413		1-20 UNEF	.540	.941	1.500	1.375		1.090		.780		MS9021-024	27344
12	.750	.859	.078	.607	.438	1.312	.527		1 1/8-18 UNEF	.689	1.065	1.625	1.500		1.215		.963	.140	MS9021-026	27345
14	.875	.984		.732		1.438	.652		1 1/4-18 UNEF	.814	1.190	1.750	1.625		1.340		1.088		MS9021-028	27346
16	1.000	1.108		.857		1.562	.777		1 3/8-18 UNEF	.939	1.320	1.938	1.781		1.477	.010	1.222		MS9021-025	27347
18	1.125	1.233		.962		1.688	.866		1 1/2-18 UNEF	1.039	1.440	2.016	1.890		1.602		1.333		MS902 -030	27348
20	1.250	1.358		1.087		1.812	.991		1 5/8-18 UNEF	1.164	1.565	2.141	2.016		1.727		1.458	.166	MS902 -031	27349
22	1.375	1.483	.125	1.212	.464	2.000	1.116		1 3/4-18 UNS	1.289	1.690	2.265	2.140		1.852		1.583		MS9021-032	27350
24	1.500	1.610		1.337		2.125	1.241		1 7/8-16 UN	1.414	1.815	2.390	2.265		1.977		1.708		MS9021-033	27351

NOTES:
1. DIMENSIONS ARE IN INCHES.
2. INSERT FRONT SURFACE SHALL BE FLAT WITHIN .005 T.I.R.
3. DIAMETERS A,D,M,Q AND Z SHALL BE CONCENTRIC WITHIN .015 T.I.R.
4. DIAMETERS D AND T SHALL BE CONCENTRIC WITHIN .005 T.I.R. AT MMC.
5. DIAMETER A WITH RESPECT TO DIAMETER B, AND DIAMETER D WITH RESPECT TO DIAMETER N, SHALL BE CONCENTRIC AT MMC.
6. SIDES OF GROOVE MAY HAVE 5° MAX TAPER.
7. NORMAL KEYWAY POSITION. FOR OTHER KEYWAY POSITIONS SEE TABLE A, FIGURE 2 OF PROCUREMENT SPECIFICATION.
8. THE POINT AT WHICH A GAGE PIN, HAVING THE SAME BASIC DIAMETER AS THE MATING CONTACT AND A SQUARE FACE, TOUCHES SOCKET CONTACT SPRING.
9. RECOMMENDED PACKING IS FOR DIMENSIONS ONLY. MATERIAL IS OPTIONAL.
10. THE GAGE FEATURES FOR GG SHALL BE CC SMALLER THAN THEIR MMC SIZE AT BASIC LOCATION.

THIS STANDARD TAKES PRECEDENCE OVER DOCUMENTS REFERENCED HEREIN.
REFERENCED DOCUMENTS SHALL BE OF THE ISSUE IN EFFECT ON DATE OF INVITATION FOR BID.

EXAMPLE OF PART NUMBER: © MS27337 T 12 A 98 P A

MS NO. — CLASS — SHELL SIZE — FINISH (COLOR) — INSERT ARR NUMBER — STYLE (P OR S) — POLARIZATION NO LETTER REQUIRED FOR NORMAL

APPROVED 26 JAN 66 REVISED (A) 10 AUG 66 (B) 1 FEB 67 (C) 20 DEC 67

MILITARY STANDARD

MS27337(USAF)

SHEET 1 OF 2

FED SUP CLASS 5935

This standard has been approved by the Department of the USAF and is mandatory for use by that activity. All other military activities are required to employ this standard where suitable.

NOTICE When Government drawings, specifications, or other data are used for any purpose other than in connection with a definitely related Government procurement operation, the United States Government thereby incurs no responsibility, nor any obligation whatsoever; and the fact that the Government may have formulated, furnished, or in any way supplied the said drawings, specifications, or other data is not to be regarded by implication or otherwise as in any manner licensing the holder or any other person or corporation, or conveying any rights or permission to manufacture, use, or sell any patented invention that may in any way be related thereto.

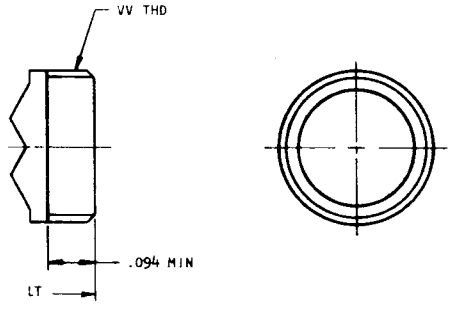

CLASS T

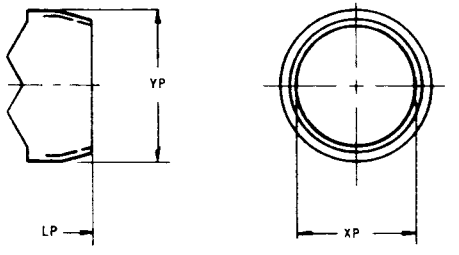

CLASS P

SHELL SIZE	LT MAX OVER-ALL LENGTH	LP MAX OVER ALL LENGTH	XP MIN DIA	YP MAX DIA	VV THREAD UNEF 2 A MOD (PLATED)	
					SIZE	MAJOR DIA MOD
8	.203	.438	.317	.531	7/16-28	.421-.417
10			.434	.641	9/16-24	.542-.538
12			.548	.766	11/16-24	.667-.663
14			.673	.891	13/16-20	.791-.787
16			.798	1.016	15/16-20	.916-.912
18			.899	1.125	1 1/16-18	1.034-1.030
20	.188		1.024	1.250	1 3/16-18	1.158-1.154
22			1.149	1.375	1 5/16-18	1.283-1.279
24	.250		1.274	1.500	1 7/16-18	1.408-1.404

APPROVED 26 JAN 66 REVISED (A) 10 AUG 66 (B) FOR CHANGES SEE SHEET 1 (C) FOR CHANGES SEE SHT 1

FED. SUP CLASS 5935

P.A. 15
Other Cust

PROCUREMENT SPECIFICATION
MIL-C-27599 (USAF)

SUPERSEDES

TITLE
CONNECTOR, RECEPTACLE, ELECTRIC, JAM NUT MOUNTING, SOLDER TYPE, BAYONET COUPLING

MILITARY STANDARD

MS27337(USAF)

SHEET 2 OF 2

DD FORM 1 SEP 67 672-1 (Limited coordination)

PREVIOUS EDITIONS OF THIS FORM ARE OBSOLETE

☆ U. S. GOVERNMENT PRINTING OFFICE: 1968-301-517/4534