INCH-POUND
MIL-C-28830/3C
22 August 1994
SUPERSEDING
MIL-C-28830/3B
30 September 1982

MILITARY SPECIFICATION SHEET

CABLES, RADIO FREQUENCY, COAXIAL, SEMIRIGID, CORRUGATED OUTER CONDUCTOR, LOW LOSS FOAM DIELECTRIC, 1/2 INCH NOMINAL, 50 OHMS

This specification is approved for use by all Departments and Agencies of the Department of Defense.

The requirements for acquiring the product described herein shall consist of this specification sheet and the issue of the following specification listed in that issue of the Department of Defense Index of Specifications and Standards (DODISS) specified in the solicitation: MIL-C-28830.

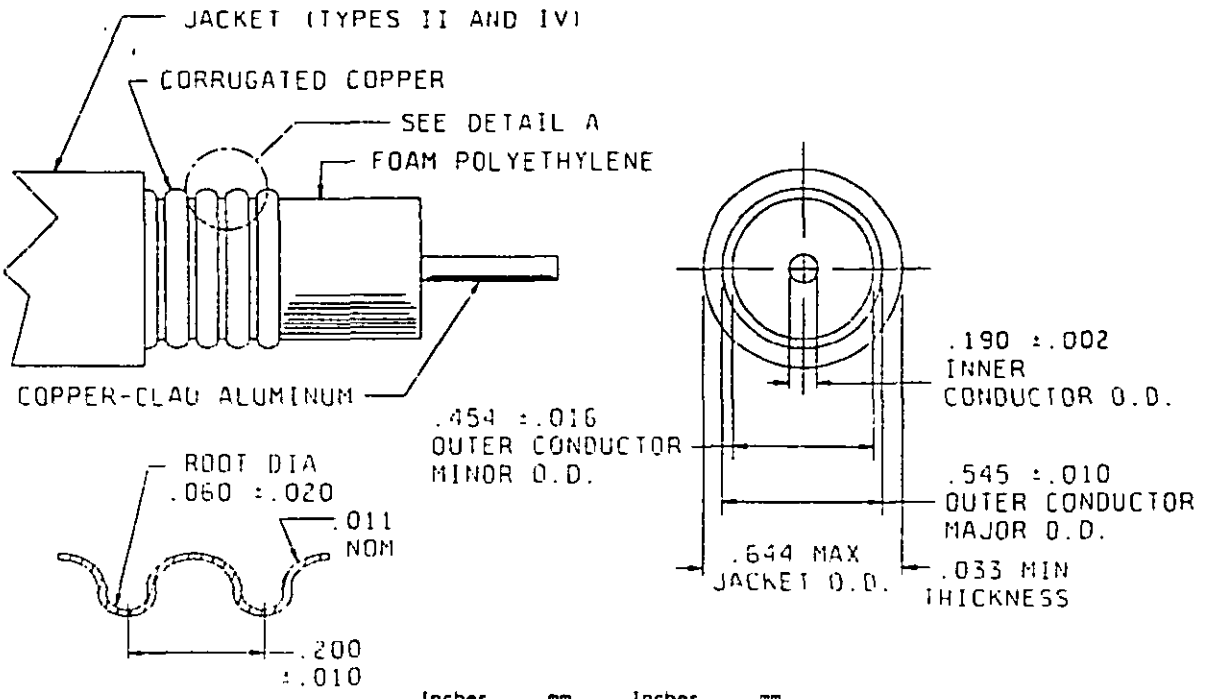

Inches	mm	Inches	mm
.002	0.05	.060	1.52
.010	0.25	.190	4.83
.011	0.28	.200	5.08
.016	0.41	.454	11.53
.020	0.51	.545	13.84
.033	0.84	.644	16.36

NOTES:
1. Dimensions are in inches.
2. Metric equivalents are given for information only.

FIGURE 1. Cable configuration.

DISTRIBUTION STATEMENT A. Approved for public release; distribution is unlimited.

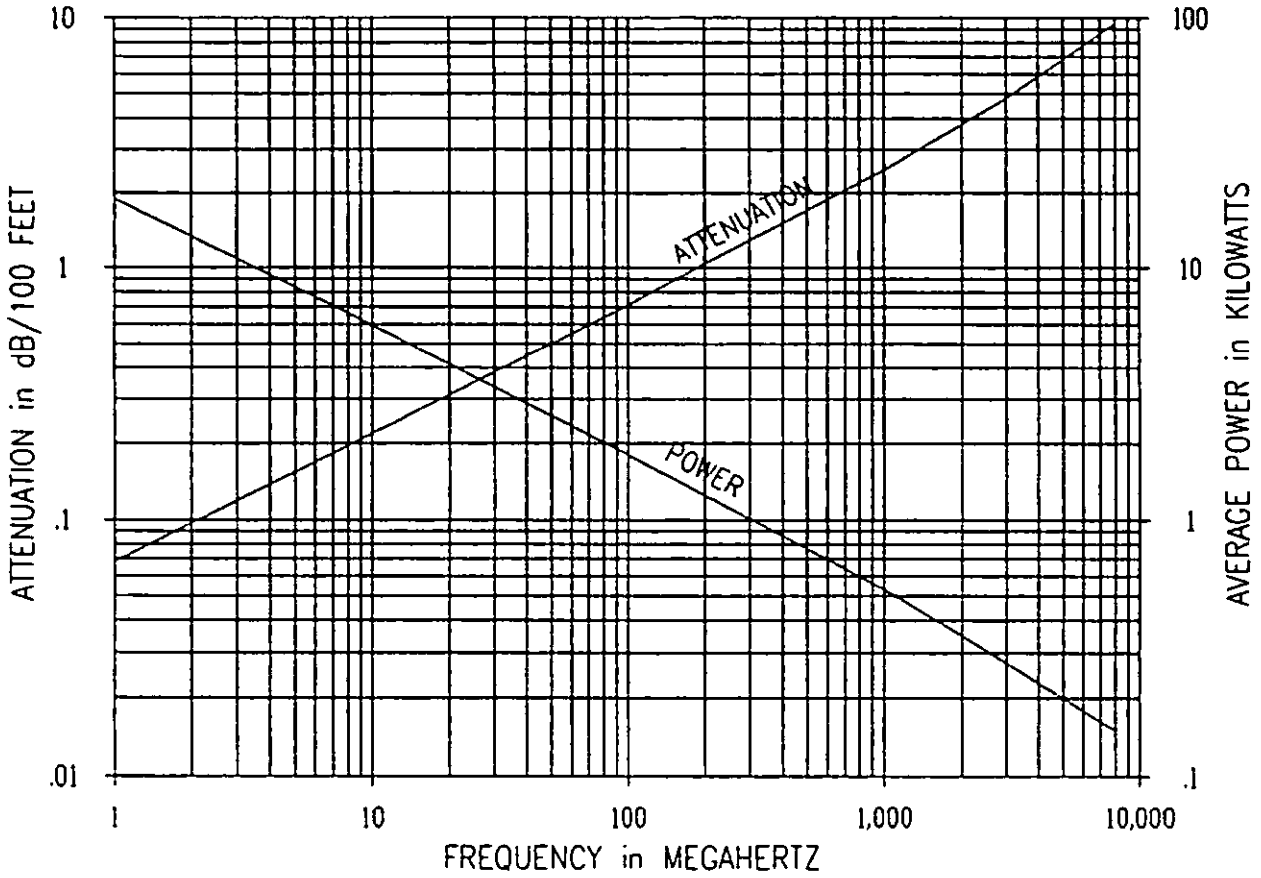

Standard conditions for average power and attenuation;

For average power:
VSWR: 1.0.
Ambient temperature: 40°C (104°F).
Inner conductor temperature: 100°C (212°F).

For attenuation:
VSWR: 1.0.
Ambient temperature: 24°C (75°F).

FIGURE 2. Power rating and attenuation.

ENGINEERING INFORMATION:

Weight:

Type II jacketing: .16 lb/ft nominal.
Type IV jacketing: .20 lb/ft nominal.

Minimum in-service bending diameter: 10 inches (0.25 meter).

Average power rating: See figure 2.

REQUIREMENTS:

Design and Construction: See figure 1.

Flexibility and cold bend mandrel diameter: 10 inches (0.25 meter) maximum.

Test cable length: 15 feet (4.6 meters).

Impedance: 50 ±2 ohms.

Attenuation (maximum):

At 400 MHz: 1.6 dB/100 feet (30.5 meters).
At 3,000 MHz: 5.4 dB/100 feet (30.5 meters).
At 8,000 MHz: 11.6 dB/100 feet (30.5 meters).

Velocity of propagation: 88 percent nominal.

Capacitance: 23.1 pF/ft nominal.

Voltage standing wave ratio (VSWR): 1.40 maximum.

VSWR frequency range: 100 MHz to 8,000 MHz.

Dielectric withstanding voltage: 6,000 V dc.

Jacket spark:

Type II jacketing: 8,000 V rms.
Type IV jacketing: 5,000 V rms.

Acid gas generation (type IV only): 2.0 maximum.

Halogen content (type IV only): 0.2 maximum.

Smoke index (type IV only): 35 maximum.

Toxicity index (type IV only): 5 maximum.

Tensile strength and elongation:

Type II jacketing: 2,100 psi and 700 percent minimum elongation.
Type IV jacketing: 1,200 psi and 115 percent minimum elongation.

Part or Identifying Number (PIN):

M28830/3-11
M28830/3-IV

Revision letters are not used to denote changes due to the extensiveness of the changes.

CONCLUDING MATERIAL

Custodians:
Army - CR
Navy - EC
Air Force - 85

Review activities:
Navy - AS, MC, SH
Air Force - 17, 19, 99
DLA - IS

Preparing activity:
DLA - ES

(Project 6145-2030-01)