MILITARY SPECIFICATION SHEET

CONNECTORS, ELECTRICAL, CIRCULAR, SCREW THREADS, HIGH DENSITY, HIGH SHOCK, SHIPBOARD, CRIMP CONTACTS RECEPTACLE, CABLE CONNECTING ASSEMBLY, STRAIGHT CLASSES DJ AND DJS

This specification is approved for use within Space and Naval Warfare Systems Command, Department of the Navy, and is available for use by all Departments and Agencies of the Department of Defense.

The complete requirements for procuring the connectors described herein shall consist of this specification and the latest issue of specification MIL-C-28840.

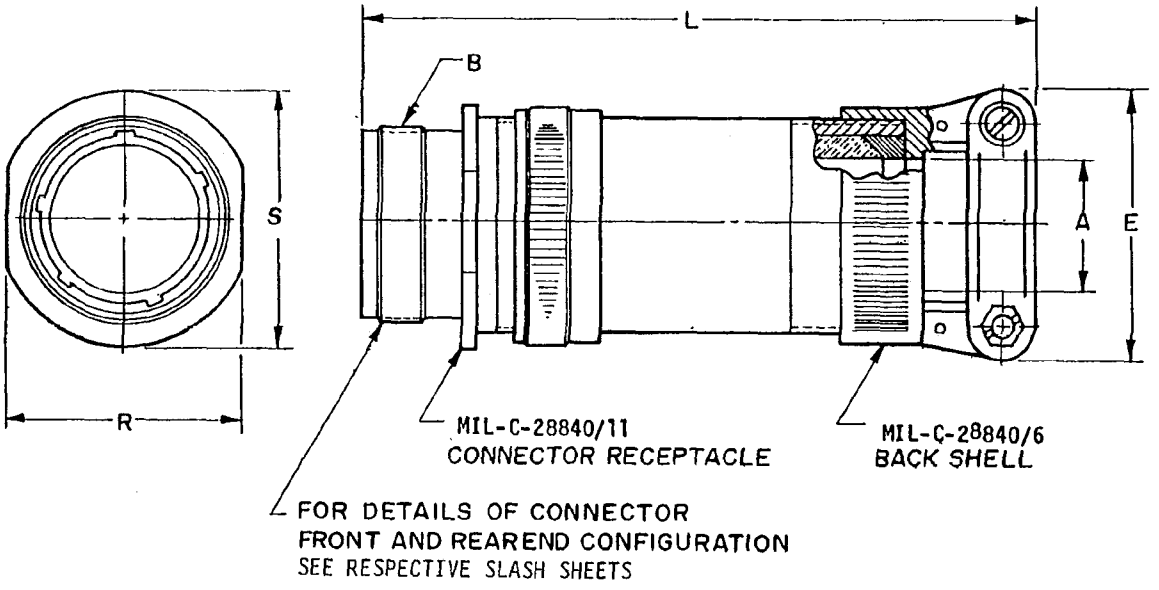

(D) Denotes change

(D) FIGURE 1. Dimensions and configuration.

Beneficial comments (recommendations, additions, deletions) and any pertinent data which may be of use in improving this document should be addressed to: Commander, Space and Naval Warfare Systems Command (SPAWAR-003-121), Washington, DC 20363-5100, by using the self-addressed Standardization Document Improvement Proposal (DD Form 1426) appearing at the end of this document, or by letter.

AMSC N/A FSC 5935

DISTRIBUTION STATEMENT A. Approved for public release; distribution is unlimited.

(D) TABLE I. Dimensions and configuration

DESIGNATOR 1/	ASSEMBLY NUMBER 6/	CONNECTOR RECEPTACLE 6/	BACKSHELL ASSEMBLY NO. 6/	A CABLE ENTRY MAX.	A CABLE ENTRY MIN.	B THREAD CLASS 2B	E MAX.	L MAX.
A (11)	M28840/21*A*A***	M28840/11*A***	M28840/601**	.312	.188	.750-.1P -.2L-D.S.	.938	6.625
A (11)	M28840/21*A*B***	M28840/11*A***	M28840/624**	.438	.281	.750-.1P -.2L-D.S.	1.125	6.625
A (11)	M28840/21*A*C***	M28840/11*A***	M28840/625**	.562	.344	.750-.1P -.2L-D.S.	1.312	6.625
B (13)	M28840/21*B*A***	M28840/11*B***	M28840/602**	.312	.188	.875-.1P -.2L-D.S.	.938	6.625
B (13)	M28840/21*B*B***	M28840/11*B***	M28840/603**	.438	.281	.875-.1P -.2L-D.S.	1.125	6.625
B (13)	M28840/21*B*C***	M28840/11*B***	M28840/626**	.562	.344	.875-.1P -.2L-D.S.	1.312	6.625
B (13)	M28840/21*B*D***	M28840/11*B***	M28840/627**	.625	.375	.875-.1P -.2L-D.S.	1.312	7.125
C (15)	M28840/21*C*A***	M28840/11*C***	M28840/605**	.438	.281	1.062-.1P -.2L-D.S.	1.125	6.625
C (15)	M28840/21*C*B***	M28840/11*C***	M28840/606**	.562	.344	1.062-.1P -.2L-D.S.	1.312	6.625
C (15)	M28840/21*C*C***	M28840/11*C***	M28840/628**	.625	.375	1.062-.1P -.2L-D.S.	1.312	7.125
C (15)	M28840/21*C*D***	M28840/11*C***	M28840/607**	.750	.438	1.062-.1P -.2L-D.S.	1.593	7.188
C (15)	M28840/21*C*E***	M28840/11*C***	M28840/604**	.312	.188	1.062-.1P -.2L-D.S.	.938	6.625
D (17)	M28840/21*D*A***	M28840/11*D***	M28840/608**	.625	.375	1.125-.1P -.2L-D.S.	1.312	7.125
D (17)	M28840/21*D*B***	M28840/11*D***	M28840/609**	.750	.438	1.125-.1P -.2L-D.S.	1.593	7.188
D (17)	M28840/21*D*C***	M28840/11*D***	M28840/610**	.938	.625	1.125-.1P -.2L-D.S.	1.750	7.188
E (19)	M28840/21*E*A***	M28840/11*E***	M28840/611**	.625	.375	1.312-.1P -.2L-D.S.	1.312	7.125
E (19)	M28840/21*E*B***	M28840/11*E***	M28840/612**	.938	.625	1.312-.1P -.2L-D.S.	1.750	7.250
F (23)	M28840/21*F*A***	M28840/11*F***	M28840/613**	.750	.438	1.500-.1P -.2L-D.S.	1.593	7.688

(D) TABLE I. Dimensions and configuration (continued)

DESIGNATOR 1/	ASSEMBLY NUMBER 6/	CONNECTOR RECEPTACLE 6/	BACKSHELL ASSEMBLY NO. 6/	A CABLE ENTRY MAX.	A CABLE ENTRY MIN.	B THREAD CLASS 2B	E MAX.	L MAX.
F (23)	M28840/21*F*B***	M28840/11*F***	M28840/614**	.938	.625	1.500-.1P -.2L-D.S.	1.750	7.812
F (23)	M28840/21*F*C***	M28840/11*F***	M28840/615**	1.188	.812	1.500-.1P -.2L-D.S.	2.093	7.938
G (25)	M28840/21*G*A***	M28840/11*G***	M28840/616**	.938	.625	1.625-.1P -.2L-D.S.	1.750	7.750
G (25)	M28840/21*G*B***	M28840/11*G***	M28840/617**	1.188	.812	1.625-.1P -.2L-D.S.	2.093	8.438
G (25)	M28840/21*G*C***	M28840/11*G***	M28840/618**	1.250	.875	1.625-.1P -.2L-D.S.	2.093	8.438
G (25)	M28840/21*G*D***	M28840/11*G***	M28840/619**	1.380	1.000	1.625-.1P -.2L-D.S.	2.343	8.500
H (29)	M28840/21*H*A***	M28840/11*H***	M28840/620** (C)	1.188	.812	1.812-.1P -.2L-D.S.	2.093	8.438
H (29)	M28840/21*H*B***	M28840/11*H***	M28840/621**	1.380	1.000	1.812-.1P -.2L-D.S.	2.343	8.500
J (33)	M28840/21*J*A***	M28840/11*J***	M28840/622**	1.380	1.000	2.000-.1P -.2L-D.S.	2.343	8.500
J (33)	M28840/21*J*B***	M28840/11*J***	M28840/623**	1.625	1.250	2.000-.1P -.2L-D.S.	2.750	8.750

NOTES

1. Shell sizes are provided within parentheses for information and are not a part of the designator.
2. Dimensions are in inches.
3. Metric equivalents (to the Nearest .01 mm) are given for general information only and are based upon 1.0 inch equals 25.4 mm.
4. Dimensions apply after plating.
5. Normal mating keyway position shown. For alternate keyway positions see MIL-C-28840
6. Assembly shall be made up of a connector and backshell of the same material.

REQUIREMENTS:

Dimensions and configuration: See FIGURE 1 and TABLE I.

Classes: DJ and DJS.

Insert arrangements: See the section of MIL-STD-1698 corresponding to desired shell sizes.

Contacts: Style P or S crimp type.

Shell polarization: 1 thru 6, key position.

Marking: Part number on plug and on backshell.

Mating counterpart: Receptacle connectors specified in MIL-C-28840/16, 17, 18, 19, 26, 28 and 29

Installation and removal tool: As specified in MIL-I-81969/33 and /34

Part numbers shown indicate aluminum alloy hardware. If corrosion resistant steel parts are required, the connector and accessory part numbers must be changed to designate corrosion resistant hardware.

EXAMPLE OF PART NUMBER M28840/21

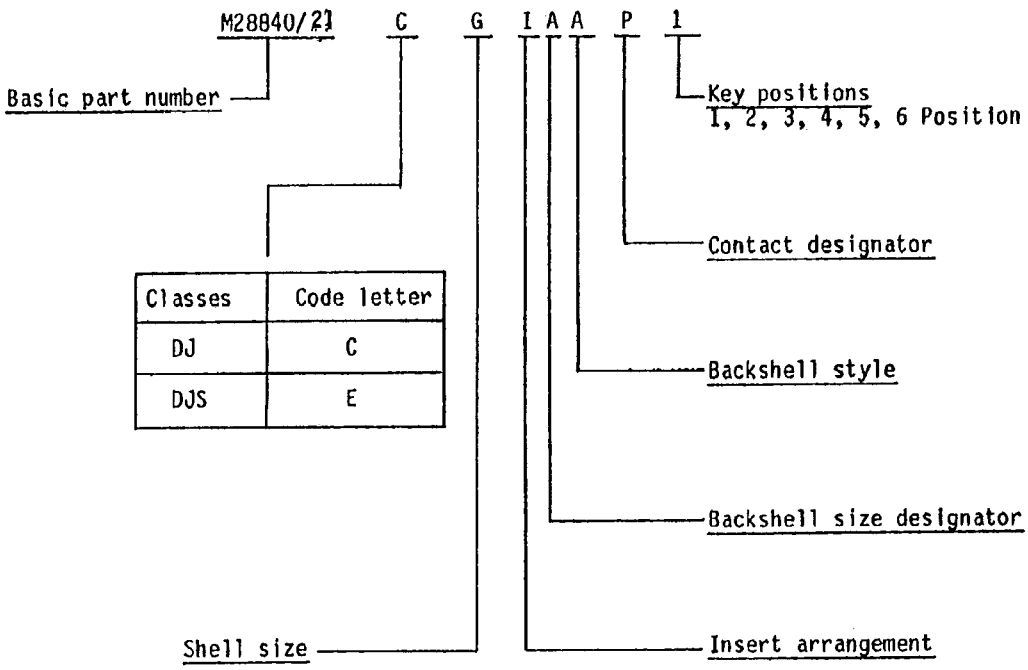

Classes	Code letter
DJ	C
DJS	E

Preparing activity:
NAVY - EC

(Project 5935-N298-05)