|METRIC|

MIL-C-49292A
23 June 1989
SUPERSEDING
MIL-C-49292(CR)
31 March 1987

MILITARY SPECIFICATION

CABLE ASSEMBLIES, NONPRESSURE PROOF, FIBER OPTIC, METRIC, GENERAL SPECIFICATION FOR

This specification is approved for use by all Departments and Agencies of the Department of Defense.

1. SCOPE

1.1 Scope. This specification covers the requirements for fabrication and test of fiber optic nonpressure proof cable assemblies intended for use with connectors specified in MIL-C-28876, MIL-C-83522, and MIL-C-83526, and with cables specified in DOD-C-85045.

2. APPLICABLE DOCUMENTS

2.1 Government documents.

2.1.1 Specifications, standards, and handbooks. The following specifications, standards, and handbooks form a part of this document to the extent specified herein. Unless otherwise specified, the issues of these documents are those listed in the issue of the Department of Defense Index of Specifications and Standards (DODISS) and supplement thereto, cited in the solicitation (see 6.2).

SPECIFICATIONS

FEDERAL

TT-I-735	-	Isopropyl Alcohol.

MILITARY

MIL-H-5606	-	Hydraulic Fluid, Petroleum Base, Aircraft, Missile, and Ordnance.
MIL-T-5624	-	Turbine Fuel, Aviation, Grades JP-4 and JP-5.
MIL-L-17331	-	Lubricating Oil, Steam Turbine and Gear, Moderate Service.
MIL-H-17672	-	Hydraulic Fluid, Petroleum, Inhibited.
MIL-M-24041	-	Molding and Potting Compound, Chemically Cured, Polyurethane (Polyether-based).
MIL-L-24467	-	Lubricating Oil, Steam Turbine, Vapor-space Inhibited.
MIL-C-28876	-	Connectors, Fiber Optic, Environment Resisting (For Navy Shipboard Application).

|Beneficial comments (recommendations, additions, deletions) and any pertinent data which may be of use in improving this document should be addressed to: US Army Communications Electronics Command, ATTN: AMSEL-ED-TO, Fort Monmouth, NJ, 07703-5016 using the self-addressed Standardization Document Improvement Proposal (DD Form 1426) appearing at the end of this document or by letter.|

AMSC N/A FSC 6020

DISTRIBUTION STATEMENT A. Approved for public release; distribution is unlimited.

MIL-C-55442	-	Cable Assemblies and Cord Assemblies, Packaging of.
MIL-C-83522	-	Connectors, Fiber Optic, Single Terminus, General Specification for.
MIL-C-83526	-	Connectors, Fiber Optic, Circular, Environmental Resistant, Hermaphroditic, General Specification For.
DOD-C-85045	-	Cable, Fiber Optics, General Specification for (Metric).

(See supplement 1 for list of associated specifications.)

STANDARDS

MILITARY

MIL-STD-105	-	Sampling Procedures and Tables for Inspection by Attributes.
MIL-STD-130	-	Identification Marking of U.S. Military Property.
MIL-STD-202	-	Test Methods for Electronic and Electrical Component Parts.
MIL-STD-810	-	Environmental Test Methods and Engineering Guidelines.
MIL-STD-1344	-	Test Methods for Electrical Connectors.
MIL-STD-1678	-	Fiber Optics Test Methods and Instrumentation.
MIL-STD-45662	-	Calibration Systems Requirements.

(Unless otherwise indicated, copies of federal and military specifications, standards, and handbooks are available from the Naval Publications and Forms Center, (ATTN: NPODS), 5801 Tabor Avenue, Philadelphia, PA 19120-5099.)

2.2 Non-Government publications. The following documents form a part of this document to the extent specified herein. Unless otherwise specified, the issues of the documents which are DOD adopted are those listed in the issue of the DODISS cited in the solicitation. Unless otherwise specified, the issues of documents not listed in the DODISS are the issues of the documents cited in the solicitation (see 6.2).

EIA-455-13	-	Visual and Mechanical Inspection of Fibers, Cables, Connectors and/or Other Fiber Optic Devices. (DOD Adopted)
EIA-455-42	-	Optical Crosstalk in Fiber Optic Components.
RS-455-51	-	Pulse Distortion Measurement of Multimode Glass Optical Fiber Information Transmission Capacity. (DOD Adopted)
EIA-455-171	-	Attenuation by Substitution Measurement for Short-Length Multimode Graded-Index and Single-Mode Optical Fiber Cable Assemblies.

(Application for copies should be addressed to Electronic Industries Association (EIA), 2001 Eye Street NW, Washington DC 20006.)

ASTM-E595	-	Materials from Outgassing in a Vacuum Environment, Total Mass Loss and Collected Volatile Condensable, Standard Test Method For. (DOD Adopted)

(Application for copies of ASTM publications should be addressed to the American Society for Testing and Materials, 1916 Race Street, Philadelphia, Pennsylvania 19103.)

(Non-Government standards and other publications are normally available from the organizations that prepare or distribute the documents. These documents also may be available in or through libraries or other informational services.)

2.3 Order of precedence. In the event of a conflict between the text of this document and the references cited herein (except for related associated detail specifications, specification sheets, or MS standards), the text of this document takes precedence. Nothing in this document, however, supersedes applicable laws and regulations unless a specific exemption has been obtained.

3. REQUIREMENTS

3.1 Specification sheets. The individual item requirements shall be as specified herein and in accordance with the applicable specification sheet. In the event of any conflict between the requirements of this specification and the specification sheet, the latter shall govern.

3.2 First article. When specified in the contract or purchase order, a sample shall be subjected to first article inspection (see 4.5 and 6.3).

3.3 Materials. The fiber optic cable assemblies shall be constructed of materials as specified herein and in the specification sheets (see 3.1). All materials used shall be ozone resistant, non-toxic, non-nutrient to fungus, and manufactured to good workmanship quality. Materials which are not specifically described herein shall be materials approved by the contracting agency.

3.3.1 O-ring lubrication. When O-rings are required (see 3.1), the O-rings shall be lubricated in accordance with the connector specification.

3.3.2 Recovered materials. Unless otherwise specified herein, all materials incorporated in the products covered by this specification shall be new and shall be fabricated using materials produced from recovered materials to the maximum extent practicable without jeopardizing the intended use. The term "recovered materials" means materials which have been collected or recovered from solid waste and reprocessed to become a source of raw materials, as opposed to virgin raw materials. None of the above shall be interpreted to mean that the use of used or rebuilt products is allowed under this specification unless otherwise specifically specified.

3.4 Construction, and physical dimensions. Unless otherwise specified (see 3.1), the construction, and physical dimensions and weight of cable harness assemblies shall be as specified herein. Tolerances shall be as specified.

3.4.1 Connectors. The fiber optic connectors shall conform to MIL-C-28876, MIL-C-83522, and MIL-C-83526.

3.4.2 Fiber optic cable. The fiber optic cables shall conform to DOD-C-85045.

3.4.3 Cable boot. When a cable boot is required (see 3.1), it shall be molded or constructed in accordance with the individual connector specification.

3.5 Interchangeability. Fiber optic cable assemblies, having the same specification part number shall be completely interchangeable with each other with respect to installation (physical) and performance (function) as specified.

3.6 Performance. Performance relates to the ability of the cable harness to provide satisfactory optical signal transmissions.

3.6.1 Insertion loss. Unless otherwise specified (see 3.1), when tested in accordance with 4.7.2, the maximum insertion loss per channel shall be as specified (see 3.1).

3.6.2 Bandwidth. When tested in accordance with 4.7.3, the bandwidth shall be as specified (see 3.1).

3.6.3 Crosstalk. Unless otherwise specified (see 3.1), when tested in accordance with 4.7.4, the signal optical power level (or sum of levels for devices with three or more channels) of the passive channels shall be below the output signal level of the active channel by at least 60 dB.

3.6.4 Cable seal flexing. Unless otherwise specified (see 3.1), when tested in accordance with 4.7.5, there shall be no loss of environmental sealing or other damage which may impair operation. After the test, insertion loss characteristics shall meet the requirements of 3.6.1.

3.6.5 Thermal shock. Unless otherwise specified (see 3.1), when tested in accordance with 4.7.6, cable assemblies subjected to the high and low temperature extremes shall reveal no evidence of connector part dimensional change, apparent loss of sealing capability, surface or identification marking impairment which affects legibility, coupling-thread binding, evidence of mating/unmating incapability, or other damage detrimental to the operation of the assembly. During and after the test, insertion loss characteristics shall meet the requirements of 3.6.1.

3.6.6 Water pressure. When specified (see 3.1), the cable assembly shall withstand the test specified in 4.7.7. The insertion loss characteristics shall meet the requirements of 3.6.1 during and after the test.

3.6.7 Low pressure (altitude). Unless otherwise specified (see 3.1), when tested in accordance with 4.7.8, cable assemblies shall exhibit no deterioration of seals or a buildup deposit that would be detrimental to the operation of the assemblies. After the test, the insertion loss characteristics of 3.6.1 shall be met.

3.6.8 Cable retention. When tested in accordance with 4.7.9, there shall be no evidence of cable jacket damage, cable clamp failure, cable to connector seal damage, distortion or bending of metallic connector parts, or cable disengagement from the clamp. Unless otherwise specified (see 3.1), the minimum cable to connector pull-out strength shall be 182 kilograms.

3.6.9 Fluid immersion. Unless otherwise specified (see 3.1), when tested in accordance with 4.7.10, cable assemblies shall not show any cracks, splits, voids or other damage detrimental to the operation of the assembly. After the test, the insertion loss characteristics of 3.6.1 shall be met.

3.6.10 Temperature cycling. Unless otherwise specified (see 3.1), when tested in accordance with 4.7.11, cable assemblies shall exhibit no deterioration of the assembly that is detrimental to operation. After the test, the insertion loss characteristics of 3.6.1 shall be met.

3.6.11 Dust. Unless otherwise specified (see 3.1), when tested in accordance with 4.7.12, cable assemblies shall not exhibit any scratches or other damage which is detrimental to operation. After the test, the insertion loss characteristics of 3.6.1 shall be met.

3.6.12 Storage temperature. Unless otherwise specified (see 3.1), when tested in accordance with 4.7.13, cable assemblies shall not exhibit any deterioration of the assembly that is detrimental to operation such as congealing of lubricants in low temperatures and cracking or melting in high temperatures. After the test, the insertion loss characteristics of 3.6.1 shall be met.

3.6.13 Humidity. Unless otherwise specified (see 3.1), when tested in accordance with 4.7.14, cable assemblies shall not exhibit any deterioration of the assembly that would cause binding due to corrosion or that is detrimental to operation. After the test, the insertion loss characteristics of 3.6.1 shall be met.

3.6.14 Vibration. Unless otherwise specified (see 3.1), when tested in accordance with 4.7.15, cable assemblies shall exhibit no visual evidence of loosening parts, relative motion between connectors and cable parts or other damage which can produce physical distortion and result in fatigue of the mechanical parts. During and after the test, insertion loss characteristics shall meet the requirements of 3.6.1.

3.6.15 Life. Unless otherwise specified (see 3.1), when tested in accordance with 4.7.16, cable assemblies subjected to these specified aging exposures shall not exhibit visual evidence of dimensional change, opening or leaking of seals, cracking or crazing of components or finishes, identification marking impairment which affects legibility, or other defects detrimental to their operation. After the test, the insertion loss characteristics of 3.6.1 shall be met.

3.6.16 Salt fog. Unless otherwise specified (see 3.1) when tested in accordance with 4.7.17, cable assemblies shall not exhibit any abnormal nicks, cracks, or scratches that indicate the removal of the normal protective coatings. After the test, the insertion loss characteristics of 3.6.1 shall be met.

3.6.17 Bonding (see 4.7.18).

3.6.17.1 Nondestructive. When specified (see 3.1), when tested in accordance with 4.7.18.1, cable assemblies shall not exhibit evidence of materials peeling back from the connector surface to reveal bare metal.

3.6.17.2 Destructive. When specified (see 3.1), when tested in accordance with 4.7.18.2, cable assemblies shall not exhibit evidence of poor bonding between the molding materials and exposed metal or cable surfaces.

3.6.18 Outgassing. When specified (see 3.1), the Total Mass Loss (TML) shall not exceed 1.0 percent and the Collected Volatile Condensable Material (CVCM) shall not exceed 0.1 percent when tested in accordance with 4.7.19.

3.7 Marking. Manufacturer's markings shall be heat shrinkable and shall consist of the military part number, date code (month and year), and manufacturer's symbol. Markings shall be in accordance with MIL-STD-130, 3 mm minimum height lettering, legible and located 305 ±76 mm from each end of the assembly.

3.8 Workmanship. The cable harness assemblies shall be dimensionally uniform and free of flaws that would degrade performance after installation, inhibit proper connection to interfacing elements or otherwise yield an inferior product. The following shall be a minimum level of visual inspection to be performed and is not intended to restrict other pertinent workmanship inspections deemed necessary by the contractor.

a. Cable assemblies shall conform to the dimensional and interchangeability requirements of this specification.

b. Loose termini, poor molding, poor fabrication, loose materials, defective bonding, damaged or improperly assembled termini, and physical defects in the seals shall not be permitted.

c. Peeling or chipping of plating or finish, galling of mated parts, nicks or burrs of metal parts, and postmolding warpage shall not be permitted.

4. QUALITY ASSURANCE PROVISIONS

4.1 Responsibility for inspection. Unless otherwise specified in the contract or purchase order, the contractor is responsible for the performance of all inspection requirements (examinations and tests) as specified herein. Except as otherwise specified in the contract or purchase order, the contractor may use his own or any other facilities suitable for the performance of the inspection requirements specified herein, unless disapproved by the Government. The Government reserves the right to perform any of the inspections set forth in the specification where such inspections are deemed necessary to ensure supplies and services conform to prescribed requirements.

4.1.1 Responsibility for compliance. All items shall meet all requirements of sections 3 and 5. The inspection set forth in this specification shall become a part of the contractor's overall inspection system or quality program. The absence of any inspection requirements in the specification shall not relieve the contractor of the responsibility of ensuring that all products or supplies submitted to the Government for acceptance comply with all requirements of the contract. Sampling inspection, as part of manufacturing operations, is an acceptable practice to ascertain conformance to requirements, however, this does not authorize submission of known defective material, either indicated or actual, nor does it commit the Government to accept defective material.

4.1.2 Test equipment and inspection facilities. Provision for test and measuring equipment and inspection facilities of sufficient accuracy, quality, and quantity to permit performance of the required inspections shall be the responsibility of the contractor. The establishment and maintenance of a calibration system to control the accuracy of the measuring and test equipment shall be in accordance with MIL-STD-45662 and as specified herein.

4.2 Classification of inspections. The inspection requirements specified herein are classified as follows:

a. Materials inspection (see 4.4).

b. First article inspection (see 4.5).

c. Quality conformance inspection (see 4.6).

4.3 Inspection conditions. Unless otherwise specified (see 3.1), all inspections shall be made in accordance with the following conditions:

a. Temperature: +15°C to +35°C.

b. Relative humidity: 20 to 80 percent.

c. Barometric pressure: 550 to 800 millimeters of mercury.

4.4 Materials inspection. The contractor shall provide a certificate of compliance that materials specified (see 3.1) were used in fabricating the delivered cable assemblies.

4.5 First article inspection. First article inspection shall be performed at a laboratory acceptable to the Government (see 6.3) on sample units produced with equipment and procedures normally used in production.

4.5.1 Sample. Unless otherwise specified (see 3.1), the first article sample shall consist of six finished fiber optic cable assemblies.

4.5.2 Inspection routine. The sample shall be subjected to the first article inspection specified in table I in the order shown. All sample units shall be subjected to the inspections of groups I and II. The sample shall then be divided into two and subjected to the inspections of groups III and IV of table I; however, each test specimen shall be subjected to only one group of test in addition to groups I and II. Optical test shall be performed on the sample when specified in table I and as specified in the individual test in section four.

4.5.3 Failures. One or more failures shall be cause for refusal to grant first article approval.

4.5.4 Disposition of sample units. The sample units which have been subjected to the first article inspection shall be delivered to the contracting activity as a part of the test report and shall not be delivered as part of a contract or purchase order.

TABLE I. First article inspection.

Inspection	Requirement paragraph	Test paragraph	Sample quantity
Group I			
Visual and mechanical	3.1, 3.3, 3.4, 3.5, 3.7, and 3.8	4.7.1	6
Group II			
Insertion loss	3.6.1	4.7.2	6
Bandwidth	3.6.2	4.7.3	6
Crosstalk	3.6.3	4.7.4	6
Group III			
Cable seal flexing	3.6.4	4.7.5	3
Thermal shock	3.6.5	4.7.6	3
Water pressure	3.6.6	4.7.7	3
Low pressure (altitude)	3.6.7	4.7.8	3
Cable retention	3.6.8	4.7.9	3
Fluid immersion	3.6.9	4.7.10	3
Temperature cycling	3.6.10	4.7.11	3
Dust	3.6.11	4.7.12	3
Storage temperature	3.6.12	4.7.13	3
Humidity	3.6.13	4.7.14	3
Group IV			
Vibration	3.6.14	4.7.15	3
Life	3.6.15	4.7.16	3
Salt fog	3.6.16	4.7.17	3
Bonding	3.6.17	4.7.18	3

4.6 Quality conformance inspection.

4.6.1 Inspection of product for delivery. Inspection of product for delivery shall consist of groups A and B inspections.

4.6.1.1 Unit of product. A unit of product shall be one fiber optic cable assembly.

4.6.1.1.1 Inspection lot. The inspection lot shall consist of the number of units of product, offered for inspection at one time. All of the units of product in the inspection lot submitted shall have been produced during the same production period with the same materials and processes.

4.6.1.1.2 Sample unit. A sample unit shall be a unit of product selected at random from the inspection lot without regard to quality.

4.6.1.1.3 Sample unit size. Unless otherwise specified, the sample unit size shall consist of that number of sample units required by the inspection lot size, as determined by the sampling plans in MIL-STD-105.

4.6.1.2 Group A inspection. Group A inspection shall consist of the inspections specified in table II.

4.6.1.2.1 Sampling plan. Statistical sampling and inspection shall be in accordance with MIL-STD-105 for general inspection level II. The acceptance quality level (AQL) shall be 1 percent major, 4 percent minor.

4.6.1.2.2 Rejected lots. If an inspection lot is rejected, the contractor may rework it to correct the defects, or screen out the defective units, and resubmit for reinspection. Resubmitted lots shall be inspected using tightened inspection and shall not thereafter be tendered for acceptance unless the former rejection or requirement of correction is disclosed. Such lots shall be separate from new lots, and shall be clearly identified as reinspected lots.

4.6.1.2.3 Disposition of sample units. Sample units from which a specimen has failed any of the group A inspection tests shall not be delivered on any order, even though the inspection lot submitted is accepted.

TABLE II. Group A inspection.

Inspection	Requirement paragraph	Test paragraph
Visual and mechanical inspection	3.1, 3.3, 3.4, 3.5, 3.7, and 3.8	4.7.1
Insertion loss	3.6.1	4.7.2

4.6.1.3 Group B inspection. Group B inspection shall consist of the inspections specified in table III.

4.6.1.3.1 Sampling plan. The sampling plan shall be in accordance with MIL-STD-105 for special inspection level S-3. The sample size shall be based on the inspection lot size from which the sample was selected for group A inspection. The AQL shall be 2.5 percent.

4.6.1.3.2 Rejected lots. If an inspection lot is rejected, the contractor may rework it to correct the defects, or screen out the defective units, and resubmit for reinspection. Resubmitted lots shall be inspected using tightened inspection and shall not thereafter be tendered for acceptance unless the former rejection or requirement of correction is disclosed. Such lots shall be separate from new lots, and shall be clearly identified as reinspected lots.

4.6.1.3.3 Disposition of sample units. Sample units from which a specimen has failed any of the group B inspection tests shall not be delivered on any order, even though the inspection lot submitted is accepted.

TABLE III. Group B inspection.

Inspection	Requirement paragraph	Test paragraph
Bandwidth	3.6.2	4.7.3
Crosstalk	3.6.3	4.7.4

4.6.2 Periodic inspection. Periodic inspection shall consist of group C. Except where the results of these inspections show noncompliance with the applicable requirements (see 4.6.2.1.4), delivery of products which have passed groups A and B inspections shall not be delayed pending the results of these periodic inspections.

4.6.2.1 Group C inspection. Group C inspection shall consist of the inspections specified in table IV. Group C inspection shall be made on sample units selected from inspection lots which have passed the groups A and B inspection.

4.6.2.1.1 Sampling plan. Sample units shall be selected from those types covered by a single specification sheet in accordance with table V, 12 months after the date of notification of qualification, except when the total production in a 12-month period is less than two units of product inspection need not be made until either production is at least 2 units of product or a total of 24 months has elapsed since the inspection was performed in which case only one sample unit shall be tested.

TABLE IV. Group C inspection.

Inspection	Requirement paragraph	Test paragraph
Cable seal flexing	3.6.4	4.7.5
Thermal shock	3.6.5	4.7.6
Water pressure	3.6.6	4.7.7
Low pressure (altitude)	3.6.7	4.7.8
Cable retention	3.6.8	4.7.9
Fluid immersion	3.6.9	4.7.10
Temperature cycling	3.6.10	4.7.11
Dust	3.6.11	4.7.12
Storage temperature	3.6.12	4.7.13
Humidity	3.6.13	4.7.14
Vibration	3.6.14	4.7.15
Life	3.6.15	4.7.16
Salt fog	3.6.16	4.7.17
Bonding	3.6.17	4.7.18

TABLE V. Sampling plan for group C inspection.

Units of product from 12-month's production	Sample unit size
1 to 18, inclusive	1
19 to 40, inclusive	2
41 to 67, inclusive	3
68 to 100, inclusive	4
101 to 140, inclusive	5
141 to 200, inclusive	6
201 to 280, inclusive	7
281 to 400, inclusive	8
Over 400	2 percent

4.6.2.1.2 Failures. If one or more specimens fail to pass group C inspection, the inspection lot shall be considered to have failed.

4.6.2.1.3 Disposition of specimens. Specimens that have been tested to group C inspection shall not be delivered on the contract or purchase order.

4.6.2.1.4 Noncompliance. If a sample fails to pass group C inspection, the manufacturer shall notify the cognizant inspection activity of such failure and take corrective action on the materials or processes, or both, as warranted, and on all units of product which can be corrected and which were manufactured under essentially the same conditions, with essentially the same materials, processes, etc., and which are considered subject to the same failure. Acceptance of the product shall be discontinued until corrective action, acceptable to the Government, has been taken. After the corrective action has been taken, group C inspection shall be repeated on additional sample units (all tests and examinations or the test which the original sample failed, at the option of the Government). Groups A and B inspections may be reinstituted; however, final acceptance and shipment shall be withheld until the group C inspection has shown that the corrective action was successful. In the event of failure after reinspection, information concerning the failure shall be furnished to the cognizant inspection activity.

4.6.3 Inspection of packaging. The sampling and inspection of the preservation, packing and container marking shall be in accordance with MIL-C-55442.

4.7 Methods of inspection. Unless otherwise specified herein (see 3.1), cladding mode stripping devices shall be used when making optical measurements. The mode stripper shall be installed in the test circuit between the source and the connector. In devices with one, two, or three optical channels, optical measurements shall be made simultaneously on each channel. Unless otherwise specified (see 3.1), in devices with four or more channels, optical measurements shall be made simultaneously on three randomly selected channels.

4.7.1 Visual and mechanical inspection (see 3.1, 3.3, 3.4, 3.5, 3.7, and 3.8). The cable harness assemblies shall be inspected to verify the materials, construction, interchangeability, marking, and workmanship are in accordance with EIA-455-13.

4.7.2 Insertion loss (see 3.6.1). Insertion loss characteristics for the cable assemblies shall be tested in accordance with EIA-455-171. The appropriate test method shall be as specified (see 3.1).

4.7.3 Bandwidth (see 3.6.2). The bandwidth characteristics of the cable assembly shall be tested in accordance with RS-455-51.

4.7.4 Crosstalk (see 3.6.3). The cable assembly crosstalk characteristics shall be determined in accordance with EIA-455-42.

4.7.5 Cable seal flexing (see 3.6.4). The cable assemblies shall be tested in accordance with method 2017 of MIL-STD-1344, test procedure I. The "X" distance shall be 50 millimeters.

4.7.6 Thermal shock (see 3.6.5). The cable assembly, including mated connector assemblies shall be subjected to the thermal shock test as specified in method 503, of MIL-STD-810. Test shall include 5 cycles of exposure with each exposure consisting of 4 hours exposure at each temperature listed in table VI.

TABLE VI. Thermal shock test conditions.

Step	Temperature - °C
1	-30 +0, -5
2	+4 ±5
3	+60 +5, -0
4	+15 ±5

4.7.7 Water pressure. Mated cable assemblies shall be tested for water pressure susceptibility as follows: Jam-nut connectors shall be mounted on a 4-inch sealed tube. No ingress of water into the tube is allowed. Test shall be accomplished using three sets of samples: in-line connectors mated with dust caps, jam-nut connectors mated with dust caps, and in-line connectors mated with jam-nut connectors. The assemblies shall be immersed to a minimum depth of 1.00 m for a period of not less than 48 hours. The temperature shall be maintained between 10°C and 35°C during the exposure period. The assemblies shall be externally cleaned, unmated, examined for water penetration into the connector, mated and optically tested (see 3.6.6).

4.7.8 Low pressure (altitude)(see 3.6.7). The cable assembly shall be subjected to the test procedures contained in MIL-STD-810, method 500, procedure III. The test altitudes shall be 3.05 and 12.20 kilometers.

4.7.9 Cable retention (see 3.6.8). Mated cable assemblies shall be tested in accordance with MIL-STD-1344, method 2009. The axial load of 182 kilograms shall be applied and maintained for 5 minutes.

4.7.10 Fluid immersion (see 3.6.9). The cable assemblies shall be tested in accordance with MIL-STD-1678, method 8030. The following is a list of fluids, test temperatures, and test times.

Fluids	Temperature (°C)	Immersion time (hours)
Lubricating oil (MIL-L-17331 and MIL-L-24467)	48 - 50	20
Hydraulic fluid (MIL-H-5606 and MIL-H-17672)	48 - 50	20
Isopropyl alcohol (TT-I-735)	20 - 25	168
Turbine fuel (MIL-T-5624, JP-4, and JP-5)	20 - 25	168
Coolant (Monsanto Coolanol or equivalent)	20 - 25	168

4.7.11 Temperature cycling (see 3.6.10). The cable assembly shall be tested in accordance with MIL-STD-1678, method 4010. The following is a list of test steps, test temperatures, and test times.

Step	Temperature (°C)	Duration (hours)
1.	Room ambient	24
2.	Ramp to -46°C ±2°C	2
3.	-46°C ±2°C	8
4.	Ramp to +25°C ±2°C	2
5.	+25°C ±2°C	6
6.	Ramp to +71°C ±2°C	1
7.	+71°C ±2°C	6
8.	Ramp to +25°C ±2°C	1
9.	+25°C ±2°C	6
10.	Repeat steps 2 through 9 four times for a total of five cycles.	

Inducated attenuation measurements shall be taken during the last 15 minutes of each step for each cycle (including step 1 of the first cycle).

4.7.12 Dust (see 3.6.11). The cable assembly shall be tested in accordance with MIL-STD-810, method 510, procedure 1. The assembly shall be oriented in the test chamber so that the blowing air stream intersects the longitudinal axis. The assembly shall be rotated 90 degrees at least two times.

4.7.13 Storage temperature (see 3.6.12). The cable shall be tested in accordance with MIL-STD-810, method 501 high temperature and method 502 low temperature. The procedures of both tests shall be followed.

4.7.14 Humidity (see 3.6.13). The cable shall be tested in accordance with MIL-STD-1678, method 4030. The number of test cycles shall be five. Exposure cycle for humidity shall be as specified on figure 1.

4.7.15 Vibration (see 3.6.14). The cable assemblies shall be vibrated in accordance with MIL-STD-810, method 514, category 3. Test duration shall be 30 minutes minimum with three test items on RS-453 reels.

4.7.16 Life (see 3.6.15). The life test shall be performed in accordance with MIL-STD-202, method 108, test condition B. The temperature shall be 110°C +5°C, -0°C, with a relative humidity of 95 percent. The cable assembly shall be installed in the mating receptacles. The receptacle fiber optic cables shall exit the test chamber and be sealed to the chamber wall at the exit point.

4.7.17 Salt fog (see 3.6.16). The cable assembly shall be tested in accordance with MIL-STD-810, method 509, test procedure 1. The samples shall not be mounted but shall be suspended from the top of the chamber using waxed twine or string.

4.7.18 Bonding (see 3.6.17).

4.7.18.1 Nondestructive (see 3.6.17.1). A nondestructive bond test shall be conducted on each fiber optic cable-to-connector boot seal. The polyurethane boot seal shall be tested with a round edge probe at four different locations along the circumference as specified on figure 2.

4.7.18.2 Destructive (see 3.6.17.2). The destructive bonding test shall be conducted on the assembly in a fully cured condition as determined by checking the durometer and shall be tested with a sharp knife, making two .625 inch (15.9 mm) and 3 inches (76.2 mm) long as shown on figure 3. Cut to metal surface and cable surface. Place a screwdriver or spatula (minimum width of .250 inch (6.25 mm)) approximately midway between the polyurethane surface and the metal sleeve surface in one of the cuts as shown on figure 3. Pry back the polyurethane material in this manner until the polyurethane breaks or the bond releases. Repeat this probing process along the 3-inch (76.2 mm) cut. If necessary, use pliers to pull polyurethane compound as determined by the durometer tests of both inside and outside surfaces.

4.7.19 Outgassing (see 3.6.18). The cable assembly outgassing characteristics shall be determined in accordance with ASTM test method E-595.

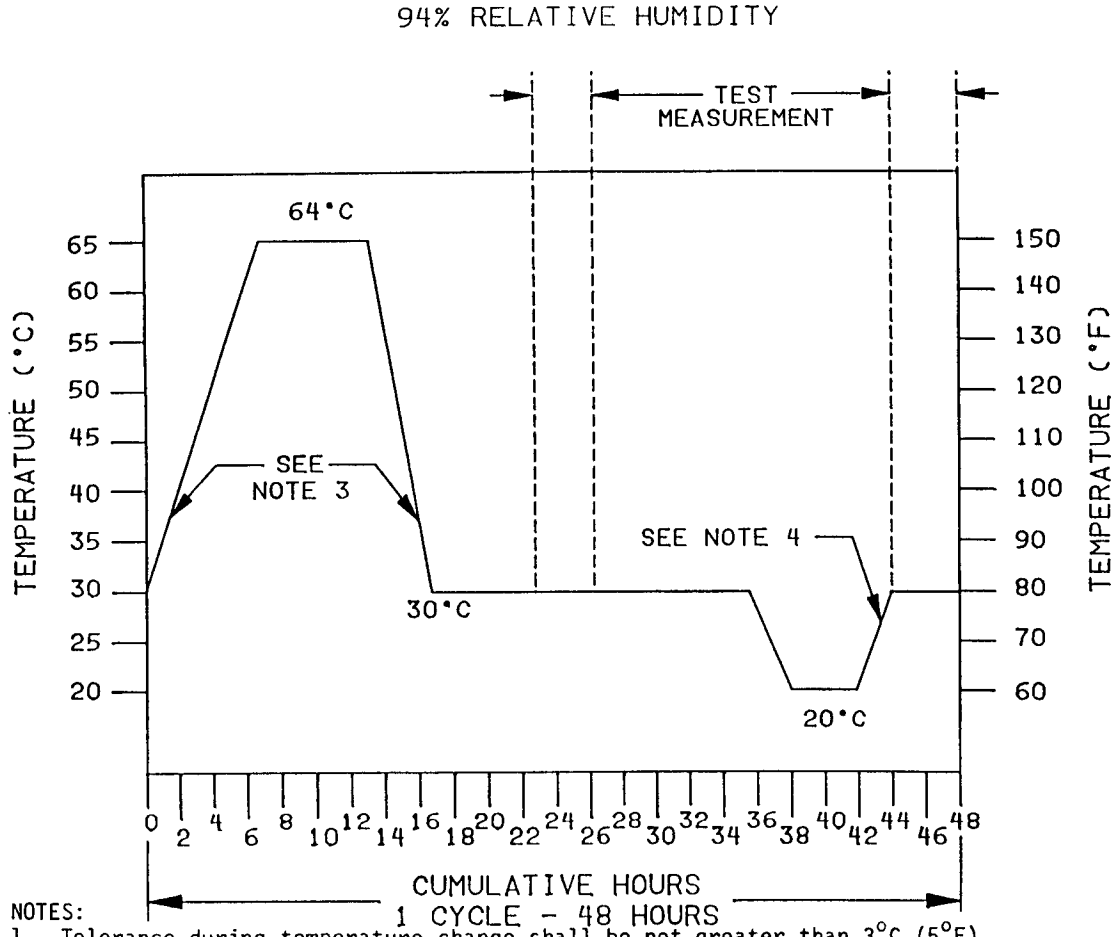

NOTES:
1. Tolerance during temperature change shall be not greater than 3°C (5°F).
2. Relative humidity shall be maintained at 94 ±4 percent at all times, except that during the descending temperature period, the relative humidity may be permitted to drop as low as 85 percent.
3. Rate of temperature change between 30°C and 65°C (86°F and 149°F) shall be not less than 8°C (14.4°F) per hour.
4. The temperature increase in this portion of the curve shall be not less than 10°C (18°F).
5. Test measurements shall be taken only at the period specified in the applicable equipment or system specification.

FIGURE 1. Humidity cycling.

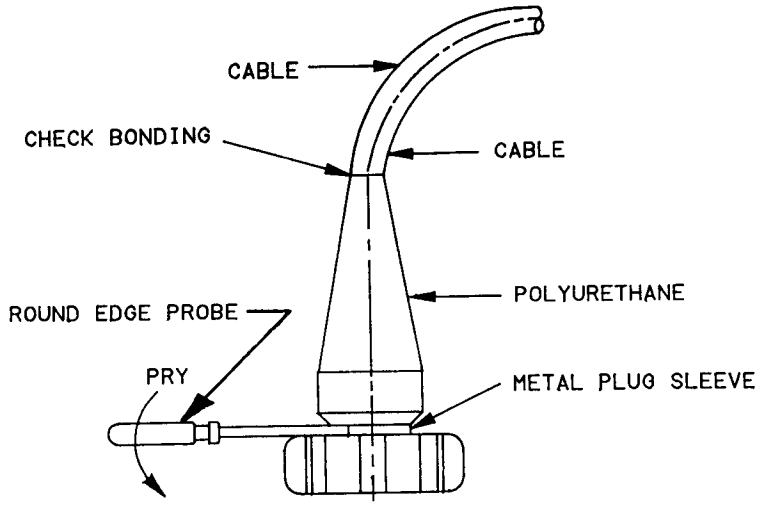

NOTE:
Use round edge probe (rigid plastic or metal) with no sharp edges or corners, do not use screwdriver.

FIGURE 2. Nondestructive bond test.

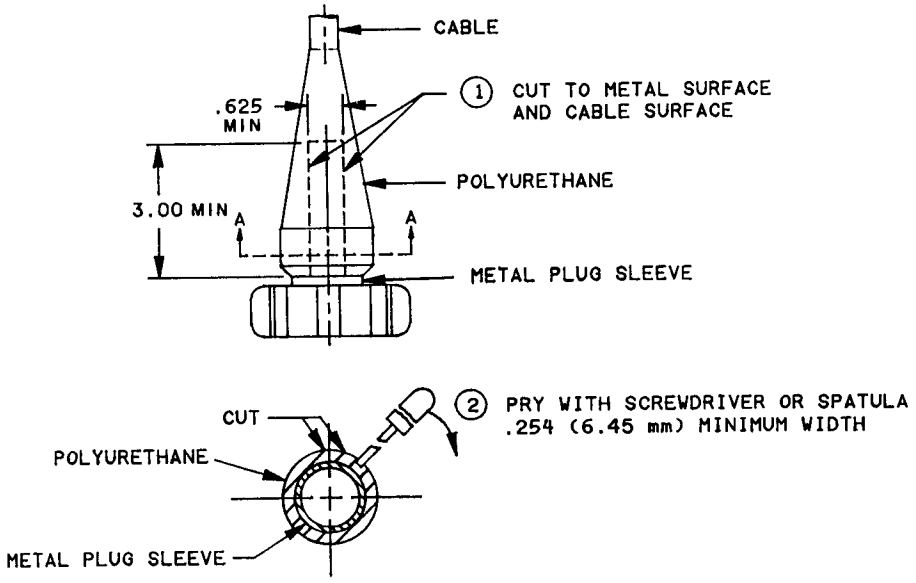

Inches	mm
.254	6.45
.625	15.88
3.00	76.2

NOTES:
1. Dimensions are in inches.
2. Metric equivalents are given for general information only.

FIGURE 3. Destructive bond test.

5. PACKAGING

5.1 Packaging requirements. The requirements for packaging shall be in accordance with MIL-C-55442.

6. NOTES

(This section contains information of a general or explanatory nature that may be helpful, but is not mandatory.)

6.1 Intended use. The fiber optic cable assemblies described in this specification are intended for use in Army Tactical and Long Haul Communications Systems; similar Navy and Air Force Communications Systems.

6.2 Ordering data.

6.2.1 Acquisition requirements. Acquisition documents should specify the following:

a. Title, number, and date of this specification.

b. Title, number, and date of the applicable specification sheet and the complete Part or Identifying Number (PIN) (see 6.6).

c. Issue of DODISS to be cited in the solicitation, and if required, the specific issue of individual documents referenced (see 2.1).

d. Special wiring requirements.

e. Length of cable assembly required.

6.3 First article. When a first article inspection is required, the fiber optic cable assemblies should be a first article sample. The first article should consist of six units. The contracting officer should include specific instructions in acquisition documents regarding arrangements for examinations, approval of first article test results and disposition of first articles. Invitations for bids should provide that the Government reserves the right to waive the requirement for samples for first article inspection to those bidders offering a product which has been previously acquired or tested by the Government, and that bidders offering such products, who wish to rely on such production or test, must furnish evidence with the bid that prior Government approval is presently appropriate for the pending contract.

6.4 Definitions.

6.4.1 Cable boot (see 3.3.1). The molded or vulcanized member of a cable assembly forming the seal between the fiber optic cable and the fiber optic connector.

6.4.2 Crosstalk (see 3.6.3). Crosstalk, as used herein, refers to unwanted, coupled optical energy from an optical circuit (the active channel) into another optical signal circuit or group of signal circuits (the passive channels). The purpose of this requirement is to ensure that the circuits of the device in question have adequate optical channel isolation.

6.4.3 Fiber optic cable (see 3.4.2). A single fiber or group of optical fibers enclosed by a common protective jacket and usually including an Aramid strength member.

6.4.4 Fiber optic cable assembly (see 3.4.1 and 3.4.2). A fiber optic cable with connector plugs or receptacles connected and sealed to each end of the cable.

6.4.5 Insertion loss test (see 3.6.1). Insertion loss, as used herein, is the total optical signal power loss in an optical circuit. The purpose of this test is to confirm the device does not excessively attenuate the optical signal.

6.5 Subcontracted material and parts. The preparation for delivery requirements of referenced documents listed in section 2 do not apply when material and parts are acquired by the contractor for incorporation into the equipment and lose their separate identity when the equipment is shipped.

6.6 PIN. The PIN shall be as specified (see 3.1).

6.7 Subject term (key word) listing.

Cable assembly
Cable boot
Fiber optic
Insertion loss
Nonpressure proof
Optical cable

6.8 Changes from previous issue. Marginal notations are not used in this revision to identify changes with respect to the previous issue due to the extensiveness of the changes.

CONCLUDING MATERIAL

Custodians:
Army - CR
Navy - SH
Air Force - 85
NASA - NA

Review activities:
Army - AR, MI, SC
Navy - AS, CG, EC, MC
Air Force - 99
DLA - ES

User activities:
Army - AV
Navy - CG, MC

Preparing activity:
Army - CR

Agent:
DLA - ES

(Project 6020-0002)