FED. SUP CLASS
5935

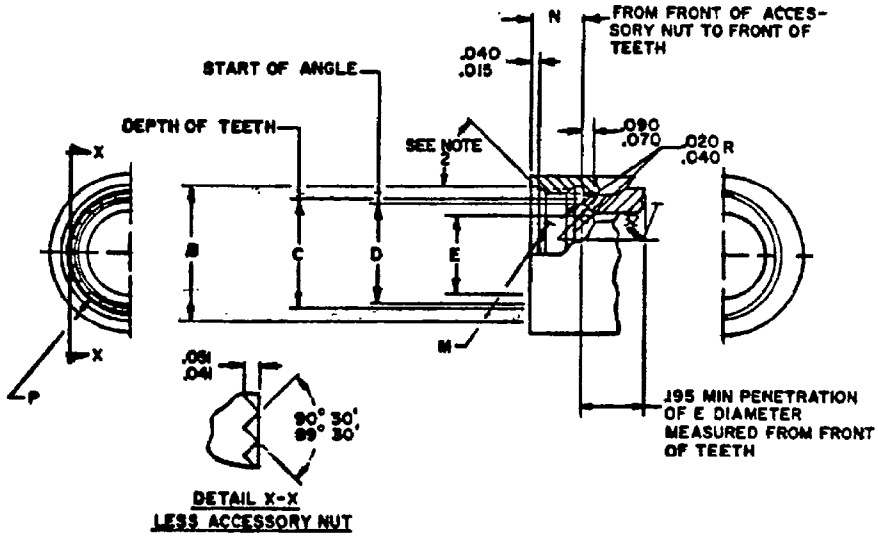

NOTES:
1. Dimensions are in inches.
2. The first thread is to be chamfered.
3. © This is a design standard and not to be used as a part number.
4. For design feature purposes, this standard takes precedence over procurement documents referenced herein.
5. Referenced documents shall be of the issue in effect on date of invitation for bid.

© Denotes changes

APPROVED 18 Oct 71 REVISED (A) 5 Apr 72 (B) 28 Nov 77 © 11 Dec 1978

User activities:

Review activities: NAVY - EC

This military standard is approved for use by Naval Air Systems Command, Department of the Navy, and is available for use by all Departments and Agencies of the Department of Defense.

P.A NAVY - AS Other	International interest	TITLE CONNECTOR, ELECTRIC, REAR ACCESSORY DESIGN STANDARD	MILITARY STANDARD MS 3155 (NAVY)
Procurement Specification MIL-C-5015		SUPERSEDES:	PAGE 1 OF 2

DD FORM 1 MAY 73 672 (Limited coordinated) PREVIOUS EDITIONS OF THIS FORM ARE OBSOLETE.

Project No. 5935-N100-1

This military standard is approved for use by Naval Air Systems Command, Department of the Navy, and is available for use by all Departments and Agencies of the Department of Defense.

Review activities: Navy - EC

User activities:

FOR CONNECTOR SHELL SIZE (REF)			B	C ©	D	E ©	M	N	P
MIL-C-81703 SERIES 3	MIL-C-26482 SERIES 2 or MIL-C-83723 SERIES 1 & 3	MIL-C-5015 or MIL-C-83723 SERIES 1 & 3 CRIMP	+.025 -.000 DIA	+.000 -.015 DIA	+.015 -.000 DIA	+.000 -.010 DIA	R.H. THREAD CLASS 2B	+.000 -.022	NUMBER OF TEETH
3			.562	.431	.370	.270	.562-24UNEF	.305	15
	8	8S	.500	.360	.299	.270	.500-20UNF	.305	12
	10	10S,10SL	.625	.494	.433	.375	.625-24UNEF	.305	15
7	12	12S,12	.750	.610	.549	.511	.750-20UNEF	.305	21
12	14	14S,14	.875	.735	.674	.585	.875-20UNEF	.305	24
19	16	16S,16	1.000	.860	.799	.710	1.000-20UNEF	.305	30
27	18	18	1.062	.916	.869	.789	1.062-18UNEF	.305	33
37	20	20	1.188	1.041	.994	.914	1.188-18UNEF	.305	36
	22	22	1.312	1.166	1.119	1.039	1.312-18UNEF	.305	39
	24	24	1.438	1.291	1.244	1.154	1.438-18UNEF	.305	42
		28	1.750	1.512	1.469	1.389	1.750-18UNS	.467	54
		32	2.000	1.762	1.715	1.635	2.000-18UNS	.467	63
		36	2.250	1.977	1.930	1.850	2.250-16UN	.467	72
		40	2.500	2.192	2.145	2.065	2.500-16UN	.467	81
		44	2.750	2.447	2.400	2.320	2.750-16UN	.467	87
		48	3.000	2.697	2.650	2.570	3.000-16UN	.467	96
61			1.500	1.354	1.307	1.194	1.500-18UNEF	.305	45

APPROVED 18 Oct 71

REVISED © For changes see pages 1 & 2

FED. SUP CLASS 5935

P.A NAVY - AS

Other Cust

Procurement Specification MIL-C-5015

International Interest

TITLE CONNECTOR, ELECTRIC, REAR ACCESSORY DESIGN STANDARD

SUPERSEDES:

MILITARY STANDARD

MS 3155(NAVY)

DD FORM 1 MAY 73 672 (Limited coordinated) PREVIOUS EDITIONS OF THIS FORM ARE OBSOLETE.

Project No. 5935-NTOO-1