FED. SUP CLASS
5935

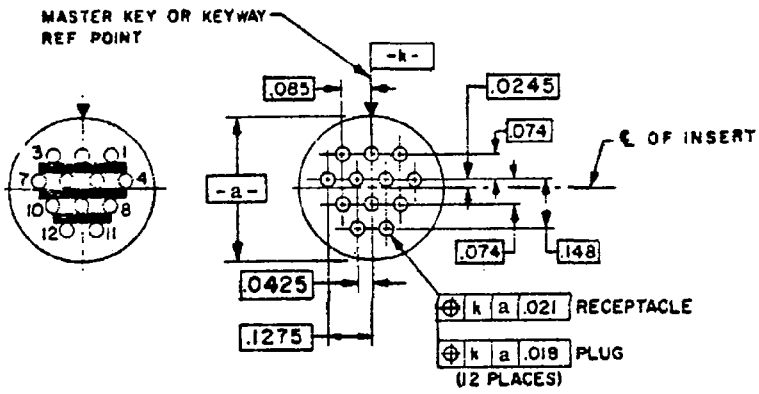

CODE B01 INSERT ARRANGEMENT 10-12, SERVICE RATING I, 12 SIZE 23-22 CONTACTS

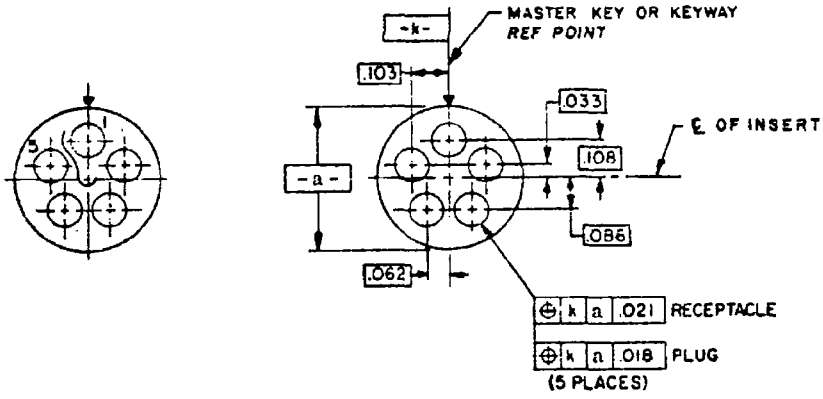

CODE B02 INSERT ARRANGEMENT 10-05, SERVICE RATING I, 5 SIZE 20-20 CONTACTS

(B) REVISED

P.A. NAVY-AS Other Cust ARMY-EL AF-17	International Interest	TITLE INSERT ARRANGEMENTS, MIL-C-81511 ELECTRIC CONNECTOR, SIZE 10	MILITARY STANDARD MS 3426
Procurement Specification MIL-C-81511		SUPERSEDES: MIL-C-81511-9	SHEET 1 OF 3

DD FORM 10 APR 64 672 (Coordinated) PREVIOUS EDITIONS OF THIS FORM ARE OBSOLETE. PROJECT NO. 5935-1530

APPROVED 5 JUNE 1970 REVISED (A) 30 OCT 1970 (B) 5 DEC 73

User activities: Army-ME,AT Navy-MC Air Force -

Reviewer activities: Army-MI,MU,AV,WC Navy-SH,EC,OS Air Force-11,80

This military standard is approved for use by all Departments and Agencies of the Department of Defense. Selection for all new engineering and design applications and for repetitive use shall be made from this document.

FED. SUP CLASS
5935

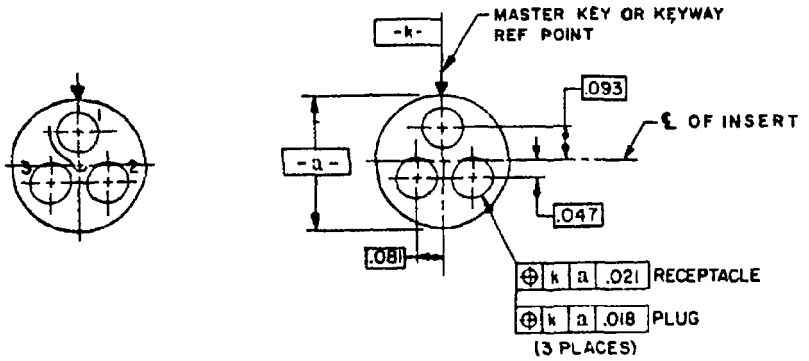

CODE B03 INSERT ARRANGEMENT 10-03, SERVICE RATING I, 3 SIZE 16-16 CONTACTS

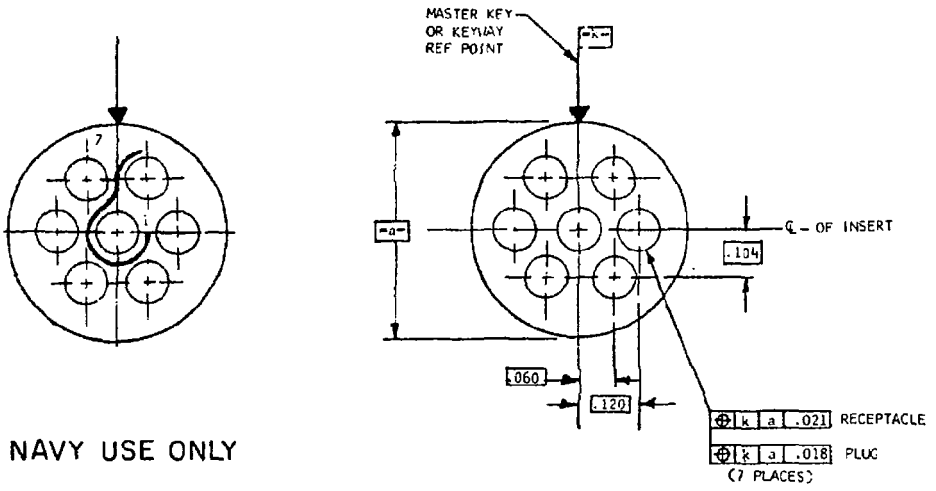

FOR NAVY USE ONLY

CODE B04 INSERT ARRANGEMENT 10-07, SERVICE RATING I, 7 SIZE 20-20 CONTACTS

Ⓑ ADDED INSERT ARRANGEMENT

APPROVED 5 JUNE 1970 REVISED Ⓑ FOR CHANGES SEE SHEET 1

P.A. NAVY-AS Other Cust ARMY-EL AF-17	International Interest	TITLE INSERT ARRANGEMENTS. MIL-C-81511 ELECTRIC CONNECTOR. SIZE 10	MILITARY STANDARD MS 3426
Procurement Specification MIL-C-81511		SUPERSEDES: MIL-C-81511/9	SHEET 2 OF 3

User activities: Army-ME, AT Navy-MC Air Force

Reviewer activities: Army-MI, MU, AV, WC Navy-SH, EC, OS Air Force-11, 80

This military standard is approved for use by all Departments and Agencies of the Department of Defense. Selection for all new engineering and design applications and for repetitive use shall be made from this document.

FED. SUP CLASS
5935

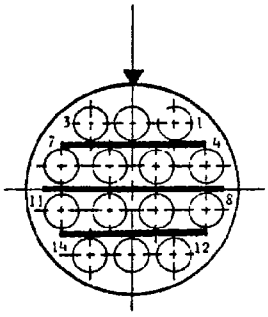

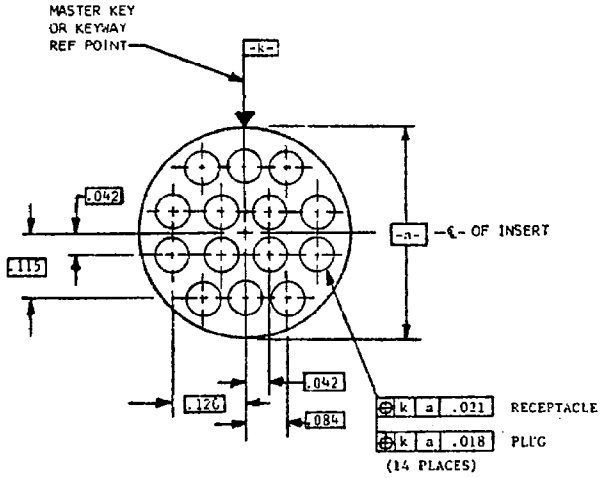

FOR NAVY USE ONLY

CODE B05 INSERT ARRANGEMENT 10-14, SERVICE RATING I, 14 SIZE 23-22 CONTACTS

Ⓑ ADDED INSERT ARRANGEMENT

NOTES:

1. DIMENSIONS IN INCHES.
2. UNLESS OTHERWISE INDICATED, DIMENSIONS ARE SYMMETRICAL ABOUT CENTERLINES.
3. DIMENSIONS AND MARKINGS SHOWN ARE FOR ENGAGING FACE OF PIN INSERT (SOCKET INSERT OPPOSITE).
4. ▼ INDICATES CENTERLINE OF INSERT ARRANGEMENT AND MASTER KEY OR KEY WAY OF CONNECTOR SHELL.
5. FOR DATUM a (-a-) REFER TO FIGURES 4 THROUGH 11 OF MIL-C-81511.

THIS IS A DESIGN STANDARD. NOT TO BE USED AS A PART NUMBER.

FOR DESIGN FEATURE PURPOSES. THIS STANDARD TAKES PRECEDENCE OVER PROCUREMENT DOCUMENTS REFERENCED HEREIN REFERENCED DOCUMENTS SHALL BE OF THE ISSUE IN EFFECT ON DATE OF INVITATIONS FOR BID.

APPROVED 5 JUNE 1970 REVISED Ⓑ FOR CHANGES SEE SHEET 1

P.A. NAVY-AS Other Cust ARMY-EL AF-17	International Interest	TITLE INSERT ARRANGEMENTS, MIL-C-81511 ELECTRIC CONNECTOR, SIZE 10	MILITARY STANDARD MS 3426
Procurement Specification MIL-C-81511		SUPERSEDES: MIL-C-81511/9	SHEET 3 OF 3

This military standard is approved for use by all Departments and Agencies of the Department of Defense. Selection for all new engineering and design applications and for repetitive use shall be made from this document.

Reviewer activities: Army-MI, MU, AV, WC Navy-SH, EC, OS Air Force-11, 80

User activities: Army-ME, AT Navy-MC Air Force