FED. SUP CLASS
5935

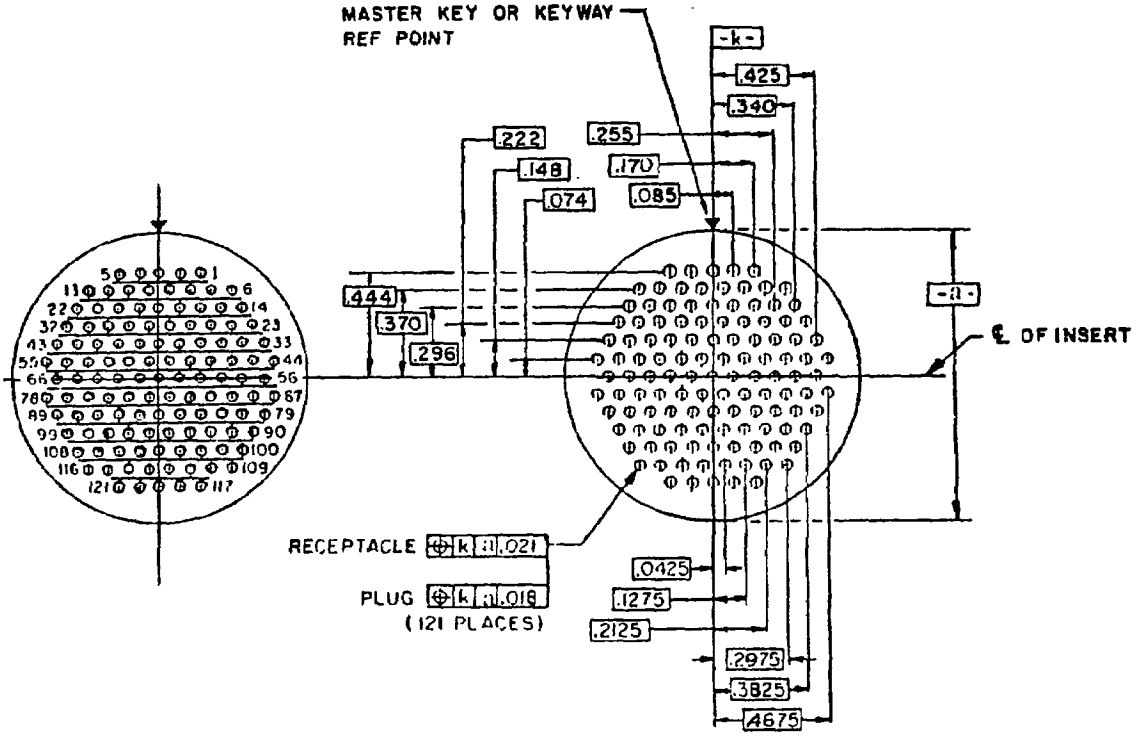

CODE 1101 INSERT ARRANGEMENT 22-121, SERVICE RATING I, 121 SIZE 23-22 CONTACTS

Ⓐ ENTIRE STANDARD REVISED

P.A. NAVY-AS Other Cust ARMY-EL AF-17	International interest	TITLE INSERT ARRANGEMENTS, MIL-C-81511 ELECTRIC CONNECTOR, SIZE 22	MILITARY STANDARD MS 3432
Procurement Specification MIL-C-81511		SUPERSEDES: MIL-C-81511 45	SHEET 1 OF 4

DD FORM 1 APR 64 672

APPROVED 5 JUNE 1970 REVISED Ⓐ 30 OCT 19:0

User activities: Army-ME,AT Navy-MC Air Force -

Reviewer activities: Army-MI,MU,AV,WC Navy-SH,EC,OS Air Force-11,80 DSA-ES

This military standard is mandatory for use by all Departments and Agencies of the Department of Defense. Selection for all new engineering and design applications and for repetitive use shall be made from this document.

FED. SUP CLASS
5935

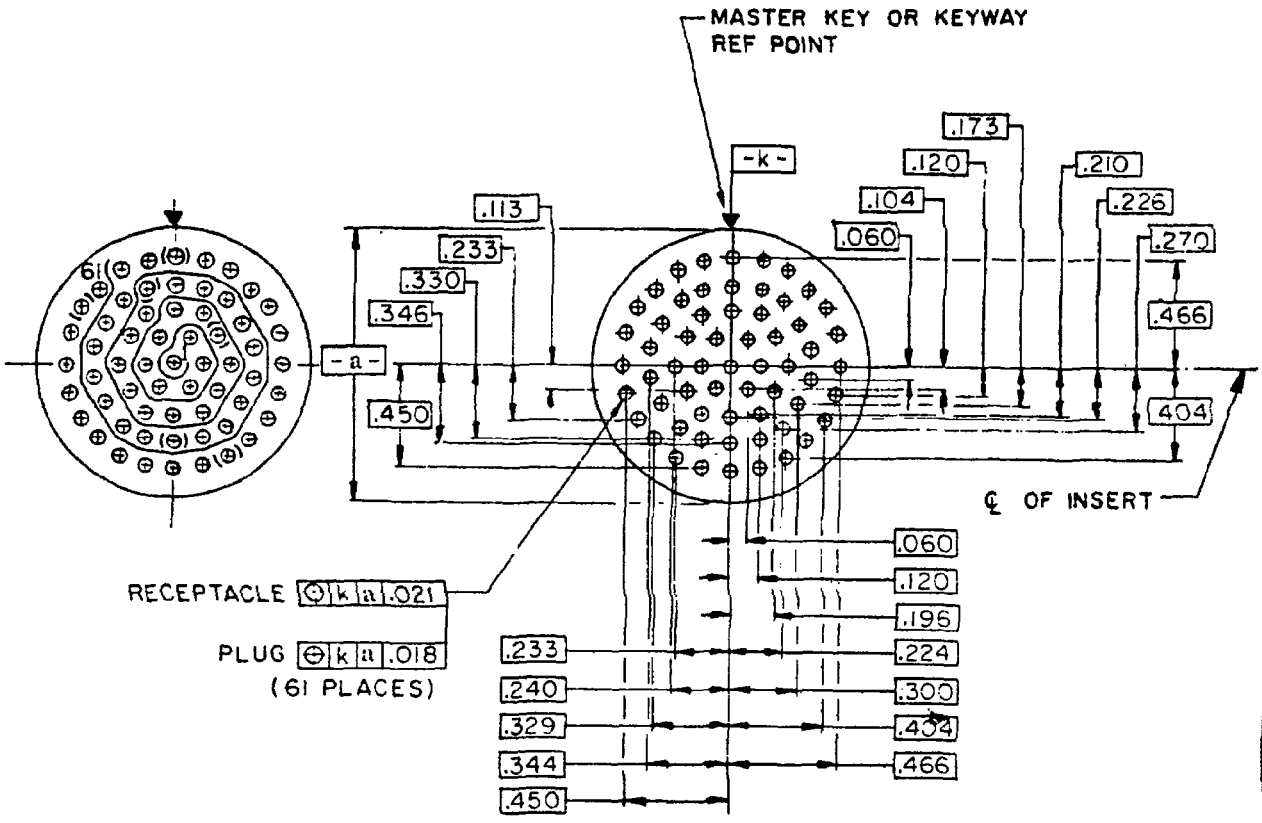

CODE 1102 INSERT ARRANGEMENT 22-61, SERVICE RATING 1, 61 SIZE 20-20 CONTACTS

APPROVED 5 JUNE 1970 REVISED (A) FOR CHANGES SEE SHEET 1

User activities: Army-ME, AT
Navy-MC
Air Force-

Reviewer activities: Army-MI, MU, AV, WC
Navy-SH, EC, OS
Air Force-11, 80
DSA-ES

This military standard is mandatory for use by all Departments and Agencies of the Department of Defense. Selection for all new engineering and design applications and for repetitive use shall be made from this document.

P.A. NAVY-AS Other Cust ARMY-EL AF-17	International interest	TITLE INSERT ARRANGEMENTS, MIL-C-81511 ELECTRIC CONNECTOR, SIZE 22	MILITARY STANDARD MS 3432
Procurement Specification MIL-C-81511		SUPERSEDES: MIL-C-81511/45	SHEET 2

FED. SUP CLASS
5935

User activities: Army-ME, AT
Navy-MC
Air Force-

Reviewer activities: Army-MI, MU, AV, WC
Navy-SH, EC, OS
Air Force-11, 80
DSA-ES

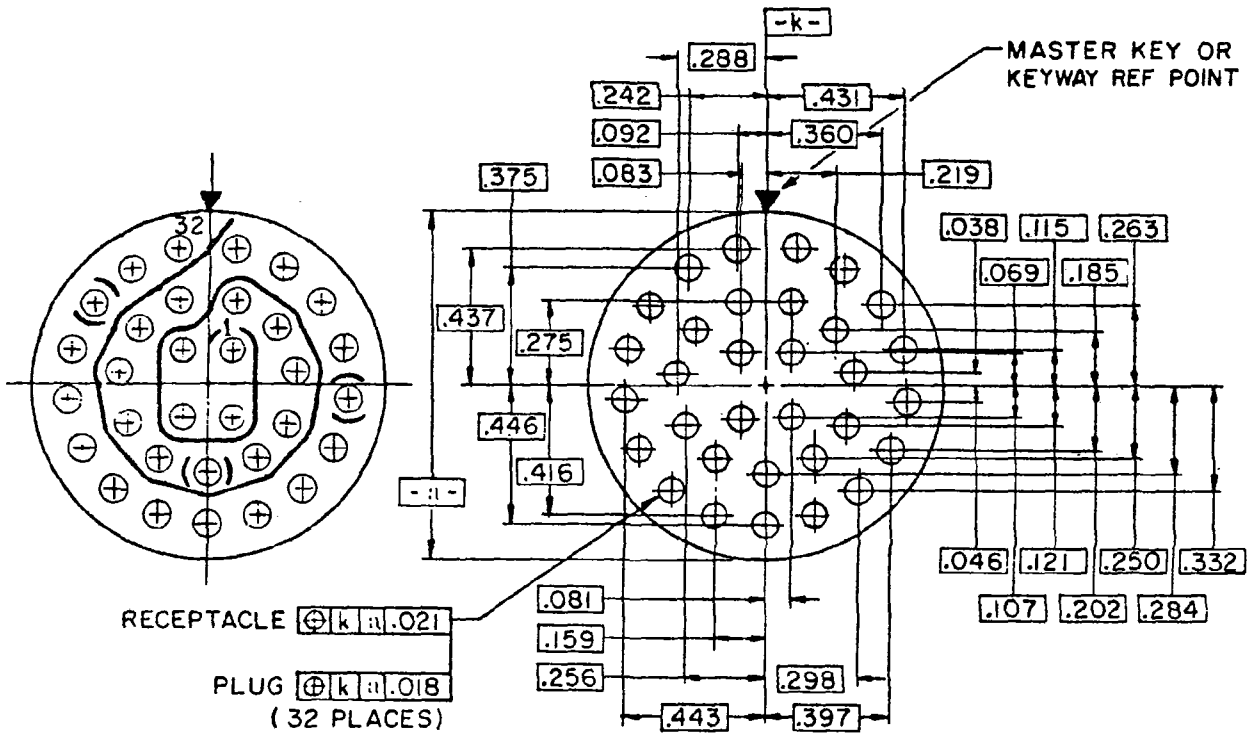

CODE 1103 INSERT ARRANGEMENT 22-32, SERVICE RATING L 32 SIZE 16-16 CONTACTS

APPROVED 5 JUNE 1970 REVISED (A) FOR CHANGES SEE SHEET 1

This military standard is mandatory for use by all Departments and Agencies of the Department of Defense. Selection for all new engineering and design applications and for repetitive use shall be made from this document.

P.A. NAVY-AS Other Cust ARMY-EL AF-17	International interest	TITLE INSERT ARRANGEMENTS, MIL-C-81511 ELECTRIC CONNECTOR, SIZE 22	MILITARY STANDARD MS3432
Procurement Specification MIL-C-81511		SUPERSEDES: MIL-C-81511 45	SHEET 3

FED. SUP CLASS
5935

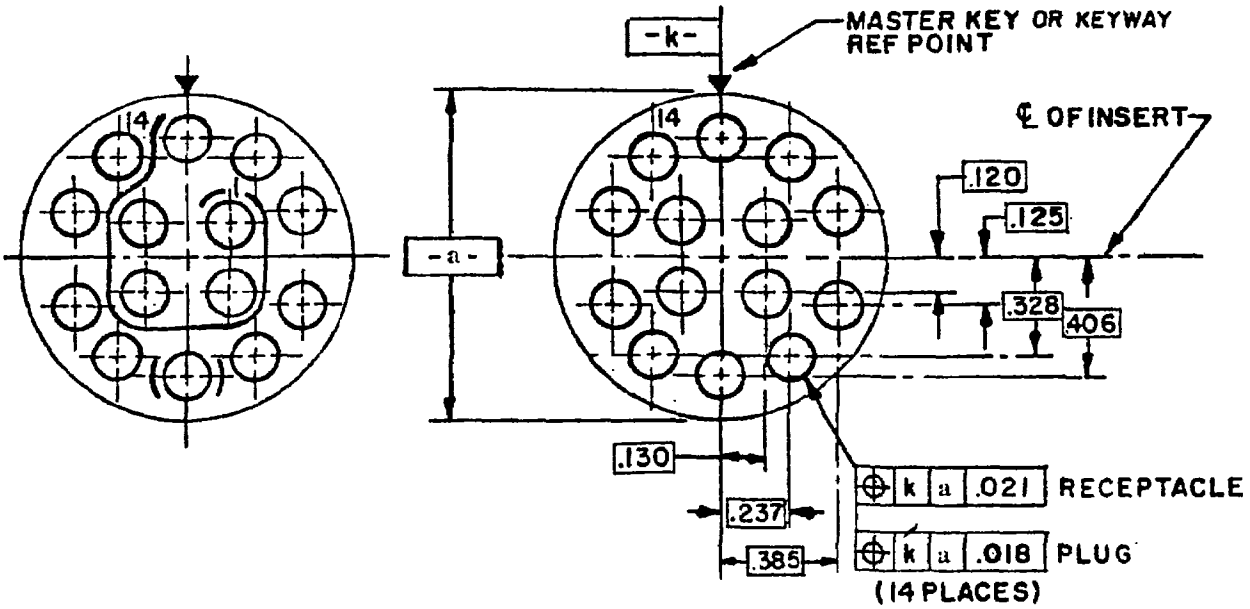

CODE 1104 INSERT ARRANGEMENT 22-14, SERVICE RATING 1, 14 SIZE 12-12 CONTACTS

INCHES	MM	INCHES	MM	INCHES	MM	INCHES	MM	INCHES	MM	INCHES	MM
.018	.46	.107	2.72	.202	5.13	.255	6.48	.329	8.36	.404	10.26
.021	.53	.113	2.87	.210	5.33	.256	6.50	.330	8.38	.405	10.31
.038	.97	.115	2.92	.2125	5.40	.263	6.68	.332	8.43	.416	10.57
.0425	1.08	.120	3.05	.219	5.56	.270	6.86	.340	8.64	.425	10.80
.046	1.17	.121	3.07	.222	5.64	.275	6.99	.344	8.74	.431	10.95
.060	1.52	.125	3.18	.224	5.69	.284	7.21	.346	8.79	.437	11.10
.069	1.75	.1275	3.24	.226	5.74	.288	7.32	.360	9.14	.443	11.25
.074	1.88	.130	3.30	.233	5.92	.296	7.52	.370	9.40	.444	11.28
.081	2.06	.148	3.76	.237	6.02	.2975	7.56	.375	9.53	.446	11.33
.083	2.11	.159	4.04	.240	6.10	.298	7.57	.3825	9.72	.450	11.43
.085	2.16	.170	4.32	.242	6.15	.300	7.62	.385	9.78	.466	11.84
.092	2.34	.173	4.39	.250	6.35	.328	8.33	.397	10.08	.4675	11.87
.104	2.64	.185	4.70								
		.196	4.98								

NOTES:

1. DIMENSIONS IN INCHES.
2. UNLESS OTHERWISE INDICATED, DIMENSIONS ARE SYMMETRICAL ABOUT CENTERLINES.
3. DIMENSIONS AND MARKINGS SHOWN ARE FOR ENGAGING FACE OF PIN INSERT/SOCKET INSERT OPPOSITE.
4. ▼ INDICATES CENTERLINE OF INSERT ARRANGEMENT AND MASTER KEY OR KEY WAY OF CONNECTOR SHELL.
5. FOR DATUM a (a) REFER TO FIGURES 4 THROUGH 11 OF MIL-C-81511.

THIS IS A DESIGN STANDARD. NOT TO BE USED AS A PART NUMBER.

FOR DESIGN FEATURE PURPOSES THIS STANDARD TAKES PRECEDENCE OVER PROCUREMENT DOCUMENTS REFERENCED HEREIN. REFERENCED DOCUMENTS SHALL BE OF THE ISSUE IN EFFECT ON DATE OF INVITATIONS FOR BID.

APPROVED 5 JUNE 1970 REVISED (A) FOR CHANGES SEE SHEET 1

P.A. NAVY-AS Other Cust ARMY-EL AF-17	International Interest	TITLE INSERT ARRANGEMENTS, MIL-C-81511 ELECTRIC CONNECTOR, SIZE 22	MILITARY STANDARD MS3432
Procurement Specification MIL-C-81511		SUPERSEDES: MIL-C-81511-45	SHEET 4

military standard is mandatory for use by all Departments and Agencies of the Department of
nse. Selection for all new engineering and design applications and for repetitive use shall
made from this document.

User activities: Army-ME,AT Navy-MC Air Force-

Reviewer activities: Army-MI,MU,AV,WC Navy-SH,EC,OS Air Force-11,80 DSA-ES