This military standard is approved by the Department of Defense and is mandatory for use by all Departments & Agencies of the Department of Defense. Selection for all new engineering and design applications and for repetitive use shall be made from this document.

P.A. NAVY-AS
Other Cust
USAF-11
ARMY-EL
Procurement Specification
MIL-C-81703

International Interest

TITLE
CONNECTOR, RECEPTACLE, ELECTRIC, SOLDER TYPE, WALL MTG. FLANGE, PUSH-PULL COUPLING, SERIES I (CLASS E, P AND J)

SUPERSEDES:

MILITARY STANDARD
MS 3130

SHEET 1 OF 3

DD FORM 10 APR 64 672 (Coordinated) PREVIOUS EDITIONS OF

5935-1761-1

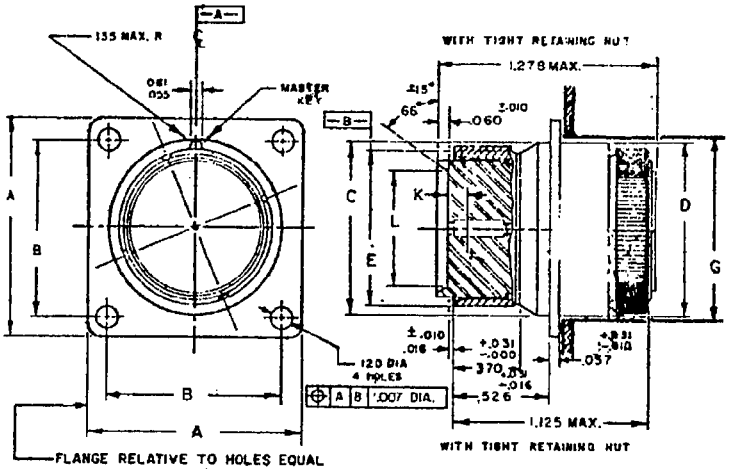

STYLE S
(SOCKET INSERT)

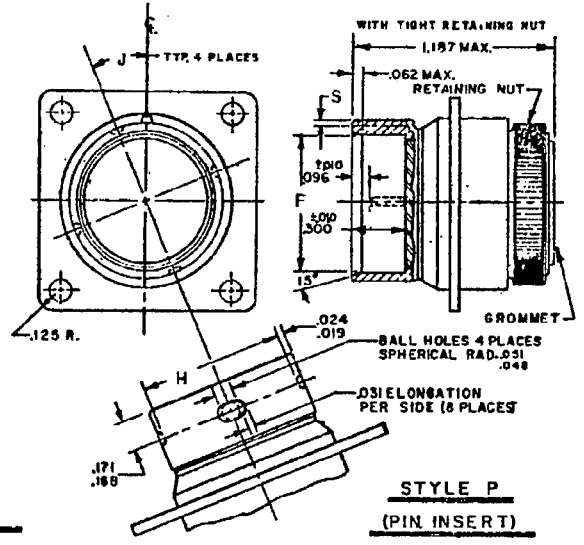

STYLE P
(PIN INSERT)

CLASS E

ENTIRE STANDARD REVISED

SHELL SIZE DASH NO.	A MAX. LENGTH SIDE	B BSC MTG. CENTERS	C MAX. DIA. FRONT	D MAX. DIA. REAR	E +.006 -.004 SHELL O.D.	F +.003 -.007 SHELL I.D.	G MIN. DIA MTG. HOLE	H +.002 -.006 BALL HOLE SPACING	J BALL HOLE LOCATION	K POINT OF SPRING CONTACT	L INSERT SEAL I.D.	S +.005 -.004 HEIGHT OF KEY	FOR INSERT ARR. SEE DWG.
-3	.896	.625	.578	.625	.435	.364	.632	.396	30°	.138 MAX. MEASURE WITH SQUARE NOSE PIN HAVING BASIC DIAMETER OF MATING CONTACT	.244	.045	MS33698
-7	1.021	.719	.691	.691	.570	.480	.698	.531	22½°		.370		MS33699
-12	1.114	.812	.828	.828	.704	.621	.835	.666			.510		MS33700
-19	1.208	.906	.953	.953	.843	.760	.960	.804			.650		MS33701
-27	1.302	.966	1.136	1.078	.998	.915	1.143	.939			.803		MS33702
-37	1.458	1.187	1.266	1.266	1.120	1.037	1.273	1.081			.927		MS33703

EXAMPLE OF PART NO. MS 3130 E 19-50 S Y

MS NUMBER — CLASS — SIZE — INSERT ARRANGEMENT — CONTACT STYLE — ALTERNATE INSERT POSITION

DIMENSIONS IN INCHES.
UNLESS OTHERWISE SPECIFIED, TOLERANCE: DECIMALS ±.010
ANGULAR TOLERANCE ±1/2°

NOTES:
1. TRUE POSITION (T.P.) TOLERANCES SPECIFIED ARE IN ACCORDANCE WITH MIL-STD 8.
2. DIMENSIONS LOCATING TRUE POSITIONS ARE BASIC.

THIS STANDARD TAKES PRECEDENCE OVER DOCUMENTS REFERENCED HEREIN. REFERENCED DOCUMENTS SHALL BE OF THE ISSUE IN EFFECT OR DATE OF INVITATION FOR BID.

FED. SUP CLASS
5935

APPROVED 14 MAY 59 REVISED (B) 1 NOV 1965 (C) 6 MAR 67 (D) 21 JULY 1971

This military standard is approved by the Department of Defense and is mandatory for use by all Departments & Agencies of the Department of Defense. Selection for all new engineering and design applications and for repetitive use shall be made from this document.

DD FORM 1 APR 64 672 (Coordinated) PREVIOUS.

P.A. NAVY-AS

Other Cust USAF-11 ARMY-EL

Procurement Specification MIL-C-81703

International Interest

TITLE CONNECTOR, RECEPTACLE, ELECTRIC, SOLDER TYPE, WALL MOUNTING FLANGE, PUSH-PULL COUPLING, SERIES I (CLASS E, P AND J)

SUPERSEDES:

MILITARY STANDARD

MS 3130

SHEET 2

CLASS P POTTED SEAL

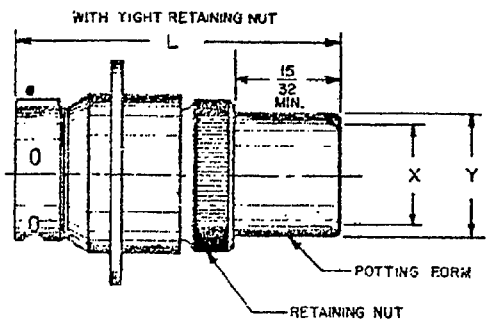

SHELL SIZE DASH NO.	L LENGTH MAX.	X DIA MIN I.D. POTTING FORM	Y DIA. MAX. O.D. POTTING FORM
– 3	1.640	.261	.391
– 7		.372	.515
– 12		.482	.630
– 19		.602	.760
– 27		.725	.887
– 37		.857	1.047

CLASS J JACKETED CABLE GLAND SEAL

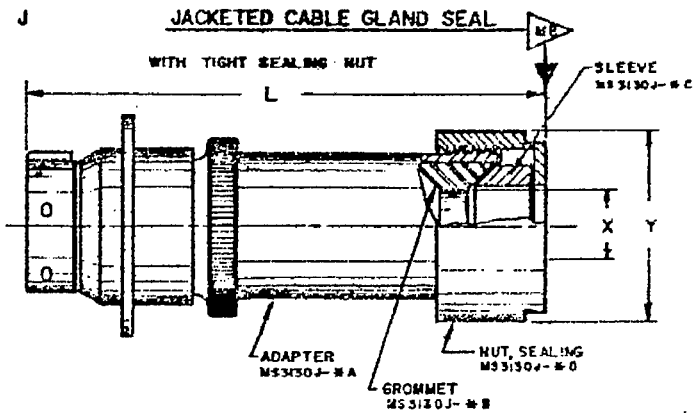

SHELL SIZE DASH NO.	L LENGTH MAX.	X CABLE SEALING MIN.	X CABLE SEALING MAX.	Y MAX. DIA. NUT	ADAPTER MS3130J-#A	GROMMET MS3130J-#B	SLEEVE MS3130J-#C	NUT SEALING MS3130J-#D
– 3	1.641	.178	.210	.645	MS3130J-3A	MS3130J-3B	MS3130J-3C	MS3130J-3D
– 7	2.625	.381	.413	.926	MS3130J-7A	MS3130J-7B	MS3130J-7C	MS3130J-7D
– 12	3.093	.412	.444	.988	MS3130J-12A	MS3130J-12B	MS3130J-12C	MS3130J-12D
– 19	3.125	.522	.554	1.113	MS3130J-19A	MS3130J-19B	MS3130J-19C	MS3130J-19D
– 27	3.125	.600	.632	1.113	MS3130J-27A	MS3130J-27B	MS3130J-27C	MS3130J-27D
– 37	3.156	.662	.694	1.176	MS3130J-37A	MS3130J-37B	MS3130J-37C	MS3130J-37D

DIMENSIONS IN INCHES UNLESS OTHERWISE SPECIFIED, TOLERANCE: DECIMALS ±.016, ANGULAR TOLERANCE ± 1/2°

NOTES

1. FOR CLASS J ADAPTER, SEALING NUT, SLEEVE AND GROMMET SEE SHEET 3.

MAX. CABLE WEIGHTS IN POUNDS (ALLOWABLE FORCE IN DIRECTION INDICATED).

SHELL SIZE	MAX. WEIGHT
– 3	2.0
– 7	4.7
– 12	7.5
– 19	5.3
– 27	8.0
– 37	12.0

EXAMPLE OF PART NO.

MS 3130 J 19-50 S Y

MS NUMBER — CLASS — SIZE — INSERT ARRANGEMENT — CONTACT STYLE — ALTERNATE INSERT POSITION

THIS STANDARD TAKES PRECEDENCE OVER DOCUMENTS REFERENCED HEREIN. REFERENCED DOCUMENTS SHALL BE OF THE ISSUE IN EFFECT OR DATE OF INVITATION FOR BID.

FED. SUP CLASS 5935

APPROVED 14 MAY 59 REVISED (D) FOR CHANGES SEE SHEETS 1,2 & 3.

This military standard is approved by the Department of Defense and is mandatory for use by all Departments & Agencies of the Department of Defense. Selection for all new engineering and design applications and for repetitive use shall be made from this document.

DD FORM 10 APR 64 672 (Coordinated) PREV

P.A. NAVY-AS

Other Cust USAF-11 ARMY-EL

Procurement Specification MIL-C-81703

International Interest

TITLE CONNECTOR, RECEPTACLE, ELECTRIC, SOLDER TYPE, WALL MOUNTING FLANGE, PUSH-PULL COUPLING, SERIES I (CLASS E, P AND J)

SUPERSEDES:

MILITARY STANDARD

MS 3130

SHEET 3

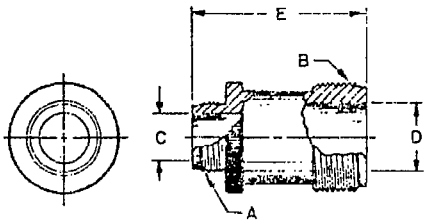

ADAPTER MS 3130J-*A

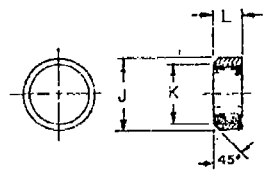

SLEEVE MS 3130J-*C

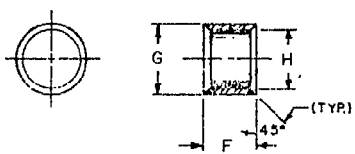

GROMMET MS 3130J-*B

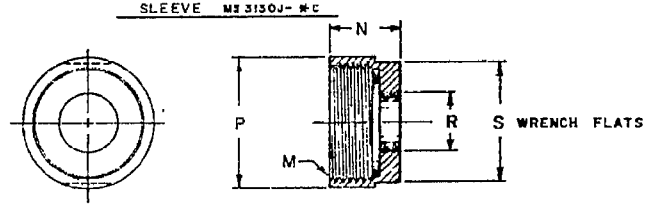

NUT, SEALING MS 3130J-*D

SHELL SIZE DASH NO.	A — ADAPTER A (THD SIZE)	B (THD. SIZE)	C I.D.	D I.D.	E O.A.L.	B — GROMMET F O.A.L.	G O.D.	CABLE SEAL DIA. H (MIN)	H (MAX.)	C — SLEEVE J O.D.	K I.D.	L O.A.L.	D — NUT, SEALING M (THD. SIZE)	N O.A.L.	P MAX. DIA. NUT	R I.D.	S WRENCH FLATS
-3	1/2-28 UNEF	1/2-28 UNEF	.304	.385	.719	.344	.375	.178	.210	.375	.281	.219	1/2-28 UNEF	.437	.645	.281	.563
-7	5/8-24 UNEF	3/16-20 UNEF	.495	.595	1.609		.580	.381	.413	.580	.485		3/16-20 UNEF		.926	.500	.812
-12	3/4-20 UNEF	3/16-20 UNEF	.593	.625	2.075		.672	.412	.444	.609	.500		3/16-20 UNEF		.988	.500	.875
-19	7/8-20 UNEF	1-20 UNEF	.718	.687	2.109	.437	.672	.522	.554	.672	.578	.246	1-20 UNEF	.531	1.113	.578	1.000
-27	1-20 UNEF	15/16-20 UNEF	.834	.750	2.109		.734	.600	.632	.734	.640		3/16-20 UNEF		1.113	.640	1.000
-37	13/16-8 UNEF	1-20 UNEF	1.037	.850	2.109		.835	.662	.694	.835	.760		1-20 UNEF	.562	1.176	.766	1.062

DIMENSIONS IN INCHES.
UNLESS OTHERWISE SPECIFIED, TOLERANCE: DECIMALS ±.016, ANGLES ±1/2

NOTES:

1. A INDICATES ADAPTER
   B INDICATES GROMMET
   C INDICATES SLEEVE
   D INDICATES NUT, SEALING
2. THESE PARTS ARE INTENDED FOR USE WITH CLASS J CONNECTORS.

EXAMPLE OF PART NO. MS 3130 J — 7 B

MS NUMBER — CLASS — SIZE — GROMMET (SEE NOTE 1)

THIS STANDARD TAKES PRECEDENCE OVER DOCUMENTS REFERENCED HEREIN. REFERENCED DOCUMENTS SHALL BE OF THE ISSUE IN EFFECT ON DATE OF INVITATION FOR BID.

FED. SUP CLASS 5935

APPROVED 14 MAY 59 REVISED (1) FOR CHANGES SEE SHEETS 1,2, & 3.

OLETE
ERNMENT PRINTING OFFICE: 1971-714-157/1:03