This military standard is approved by the Department of Defense and is mandatory for use by all Departments & Agencies of the Department of Defense. Selection for all new engineering and design applications and for repetitive use shall be made from this document.

P.A. NAVY-AS
Other Cust
USAF-11
ARMY-EL

Procurement Specification
MIL-C-81703

International Interest

TITLE
CONNECTOR, RECEPTACLE, ELECTRIC, SOLDER TYPE, BOX MTG. FLANGE, PUSH-PULL COUPLING, SERIES I (CLASS E AND H)

SUPERSEDES:

MILITARY STANDARD

MS 3132

SHEET 1 OF 2

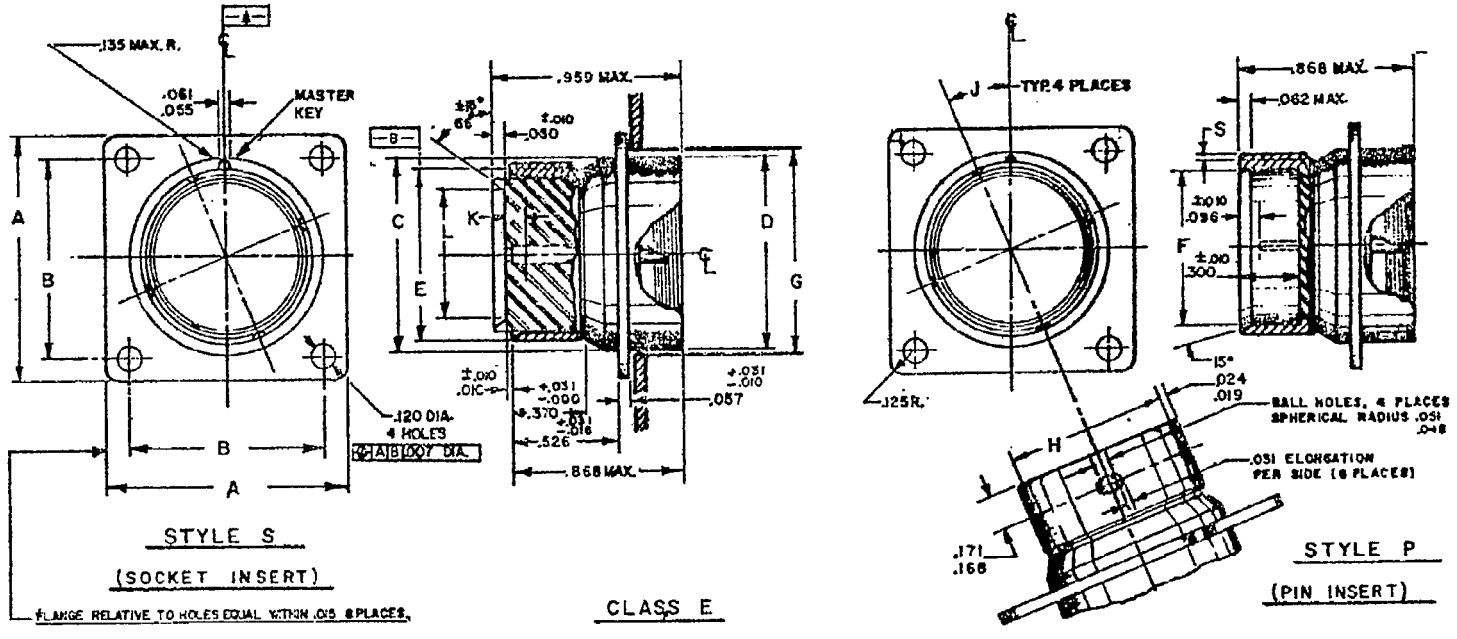

FLANGE RELATIVE TO HOLES EQUAL WITHIN .015 6 PLACES.

ENTIRE STANDARD REVISED.

SHELL SIZE DASH NO.	A MAX LENGTH SIDE	B BSC MTG. CENTERS	C MAX. DIA. FRONT	D MAX. DIA. REAR	E +.005 -.004 SHELL O.D	F +.003 -.007 SHELL I.D.	G MIN. DIA. MTG. HOLE	H +.002 -.005 BALL HOLE SPACING	J BALL HOLE LOCATION	K POINT OF SPRING CONTACT	L INSERT SEAL I.D.	S +.003 -.004 HEIGHT OF KEY	FOR INSERT ARR. SEE DWG.
-3	.896	.625	.578	.625	.435	.364	.632	.396	30°	.138 MAX. MEASURE WITH SQUARE NOSE PIN HAVING BASIC DIAMETER OF MATING CONTACT	.244	.045	MS 33698
-7	1.021	.719	.691	.691	.570	.480	.698	.531	22 1/2°		.370		MS 33699
-12	1.114	.812	.828	.828	.704	.621	.835	.666			.510		MS 33700
-19	1.208	.906	.953	.953	.843	.760	.960	.804			.650		MS 33701
-27	1.302	.968	1.138	1.078	.998	.915	1.143	.959			.803		MS 33702
-37	1.459	1.187	1.266	1.268	1.120	1.037	1.273	1.081			.927		MS 33703

EXAMPLE OF PART NO. MS 3132 E 19-30 S Y

MS NUMBER — CLASS — SIZE — INSERT — CONTACT STYLE — ALTERNATE INSERT POSITION

DIMENSIONS IN INCHES.
UNLESS OTHERWISE SPECIFIED, TOLERANCE: DECIMALS ±.010
ANGULAR TOLERANCE ± 1/2°

THIS STANDARD TAKES PRECEDENCE OVER DOCUMENTS REFERENCED HEREIN. REFERENCED DOCUMENTS SHALL BE OF THE ISSUE IN EFFECT ON DATE OF INVITATION FOR BID.

NOTES:
1. TRUE POSITION (T.P.) TOLERANCES SPECIFIED ARE IN ACCORDANCE WITH MIL-STD-8
2. DIMENSIONS LOCATING TRUE POSITIONS ARE BASIC.

FED. SUP. CLASS 5935

APPROVED 14 MAY 59 REVISED (A) 10 SEPT 1962 (B) 1 NOV 1966 (C) [illegible] 67 (D) 21 JULY 1971

DD FORM 10 APR 64 672 (Coordinated) PREVIOUS EDITIONS OF THIS FORM ARE OBSOLETE.

5935-1751-2

This military standard is approved by the Department of Defense and is mandatory for use by all Departments & Agencies of the Department of Defense. Selection for all new engineering and design applications and for repetitive use shall be made from this document.

DD FORM 10 APR 64 672 (Coordinated) PREVIOUS EDITIONS

P.A. NAVY-AS
Other Cust
USAF-11
ARMY-EL
Procurement Specification
MIL-C-81703
International Interest
TITLE
CONNECTOR, RECEPTACLE, ELECTRIC, SOLDER TYPE BOX MOUNTING FLANGE, PUSH-PULL COUPLING
SERIES 1 (CLASS E AND H)
SUPERSEDES:
MILITARY STANDARD
MS 3132
SHEET 2

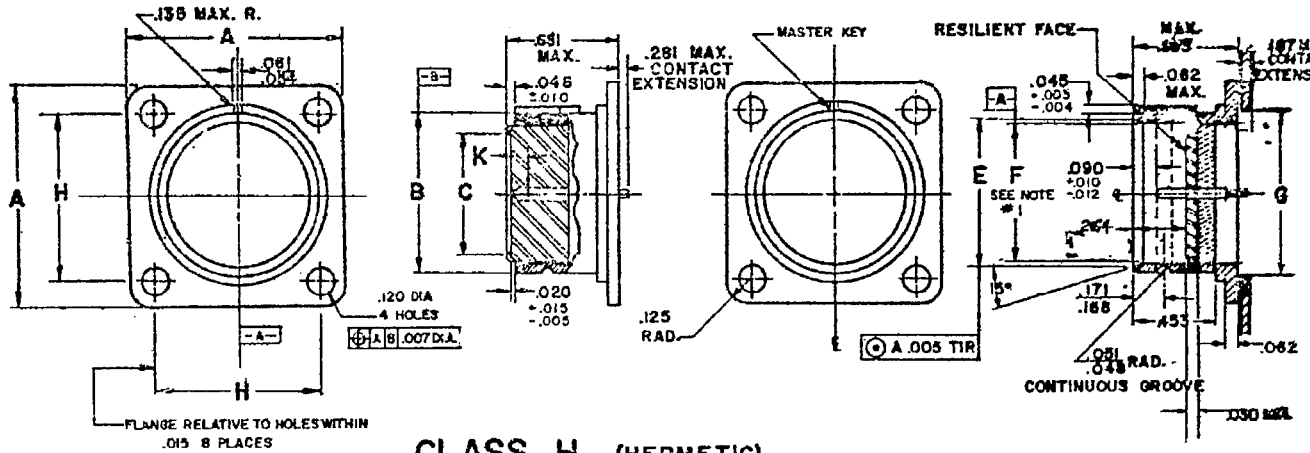

CLASS H (HERMETIC)

STYLE S (SOCKET INSERT) — STYLE P (PIN INSERT)

SHELL SIZE DASH NO.	A MAX. LENGTH SIDE	B ±.004 SHELL O.D.	C INSERT SEAL I.D.	K POINT OF SPRING CONTACT	E +.002 -.005 BALL GROOVE	F ±.004 SHELL I.D.	G MIN. MOUNTING HOLE DIA.	H BSC MOUNTING CENTERS	FOR INSERT ARRANGEMENT SEE DWG. NO.
-3	.996	.435	.304	.138 MAX. MEASURE WITH SQUARE NOSE PIN HAVING BASIC DIAMETER OF MATING CONTACT	.396	.564	.364	.625	MS 33698
-7	1.021	.570	.380		.531	.480	.480	.719	MS 33699
-12	1.114	.705	.520		.666	.621	.621	.812	MS 33700
-19	1.208	.844	.660		.804	.760	.760	.906	MS 33701
-27	1.302	1.000	.815		.959	.915	.915	.968	MS 33702
-37	1.458	1.120	.937		1.031	1.037	1.037	1.187	MS 33703

NOTES:
1. 'F' DIAMETER MAY BE .005 LARGER FOR THE FIRST .125 INCH THAN AT THE BOTTOM OF THE BORE
2. TRUE POSITION (T.P.) TOLERANCES SPECIFIED ARE IN ACCORDANCE WITH MIL-STD 8.
3. DIMENSIONS LOCATING TRUE POSITIONS ARE BASIC.

THIS STANDARD TAKES PRECEDENCE OVER DOCUMENTS REFERENCED HEREIN. REFERENCED DOCUMENTS SHALL BE OF THE ISSUE IN EFFECT ON DATE OF INVITATION FOR BID.

EXAMPLE OF PART NO: MS 3132 HY19-50 PX

MS SHELL — CLASS — SIZE — ARRANGEMENT — STYLE (P OR S) — CONTACT TERMINATION (Y=EYELETS, C=SOLDER CUPS) — INSERT POSITION

DIMENSIONS IN INCHES
UNLESS OTHERWISE SPECIFIED, TOLERANCE: ±.016 (DECIMALS)
ANGULAR TOLERANCE: ±1/2°

FED. SUP. CLASS 5935

APPROVED 14 MAY 59 REVISED (D) FOR CHANGES SEE SHEETS 1 & 2.