This military standard is approved by the
mandatory for use by all Departments & A
Defense. Selection for all new engineerin
for repetitive use shall be made from this

P.A. NAVY-AS

Other Cust
USAF-IZL
ARMY-EL

Procurement Specification
MIL-C-81703

International interest

SUPERSEDES:

TITLE
CONNECTOR, RECEPTACLE, ELECTRIC, SOLDER TYPE, JAM NUT MOUNTING, PUSH-PULL COUPLING, SERIES I (CLASS E, P, J AND H)

MILITARY STANDARD

MS3134

SHEET 1 OF 4

DD FORM 10 APR 64 672 (Coordinated) PREVIOUS EDITIONS OF THIS FORM ARE OBSOLETE.

5935-1761-3

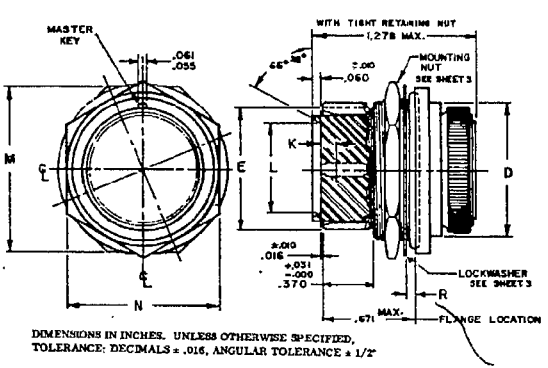

DIMENSIONS IN INCHES. UNLESS OTHERWISE SPECIFIED, TOLERANCE: DECIMALS ± .016, ANGULAR TOLERANCE ± 1/2°

STYLE S
(SOCKET INSERT)

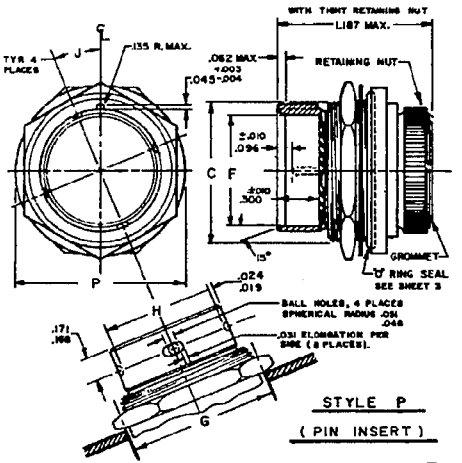

STYLE P
(PIN INSERT)

CLASS E

SHELL SIZE DASH NO.	C THREAD SIZE	D MAX. DIA. REAR	E +.006 -.004 SHELL O.D.	F +.003 -.007 SHELL I.D.	G +.020 -.005 MTG. HOLE MAX DIA. FOR SEAL	H +.002 -.001 BALL HOLE SPACING	J BALL HOLE LOCATION	K POINT OF SPRING CONTACT	L INSERT SEAL I.D.	M FLATS FLANGE	N FLATS NUT	P DIA. FLANGE 90° FROM FLATS	R MAX. PANEL THK.	FOR INSERT ARR. SEE DWG
-3	9/16-24 UNEF-2A	.625	.435	.564	.571	.396	30°	.138 MAX. MEASURE WITH SQUARE NOSE PIN HAVING BASIC DIAMETER OF MATING CONTACT	.244	.750	.625	.750	.062	MS33698
-7	11/16-24 UNEF-2A	.691	.570	.680	.696	.531	22½°		.370	.875	.812	.875	.093	MS33699
-12	13/16-20 UNEF-2A	.828	.704	.621	.818	.666			.510	1.062	.937	1.062		MS33700
-19	1-20 UNEF-2A	.953	.843	.760	1.010	.804			.650	1.156	1.062	1.187		MS33701
-27	1 1/8-18 UNEF-2A	1.078	.998	.915	1.135	.959			.803	1.312	1.250	1.312		MS33702
-37	1 1/4-18 UNEF-2A	1.266	1.120	1.037	1.260	1.081			.927	1.420	1.375	1.500		MS33703

FOR DESIGN FEATURE PURPOSES, THIS STANDARD TAKES PRECEDENCE OVER PROCUREMENT DOCUMENTS REFERENCED HEREIN. REFERENCED DOCUMENTS SHALL BE OF THE ISSUE IN EFFECT ON DATE OF INVITATIONS FOR BID.

EXAMPLE OF PART NO: MS 3134 E 19-50 S Y

MS NUMBER — CLASS — SIZE — INSERT ARRANGEMENT — CONTACT STYLE — ALTERNATE INSERT POSITION

THIS STANDARD IS NOT SUITABLE FOR USE ON AIR FORCE AERONAUTICAL SYSTEMS OR EQUIPMENT.

FED. SUP CLASS
5935

APPROVED 14 MAY 59 REVISED (E) 19 Aug 1970 (F) 21 JULY 1971

This military standard is approved by the Department of Defense and is mandatory for use by all Departments & Agencies of the Department of Defense. Selection for all new engineering and design applications and for repetitive use shall be made from this document.

P.A. NAVY-AS

Other Cust
USAF-17
ARMY-EL

Procurement Specification
MIL-C-81703

International Interest

TITLE
CONNECTOR, RECEPTACLE, ELECTRIC, SOLDER TYPE, JAM NUT MOUNTING, PUSH-PULL COUPLING, SERIES I

SUPERSEDES:

MILITARY STANDARD

MS3134

SHEET 2

DD FORM 10 APR 64 672 (Coordinated) PREVIOUS EDITIONS OF THIS FORM ARE OBSOLETE.

CLASS P — POTTED SEAL

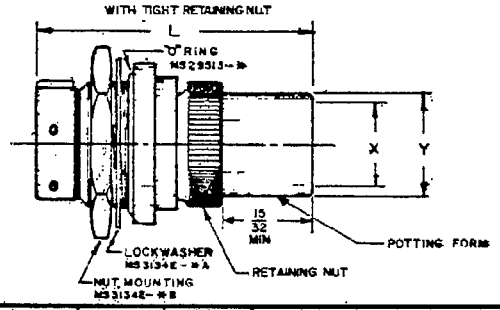

CLASS J — JACKETED CABLE, GLAND SEAL (MP)

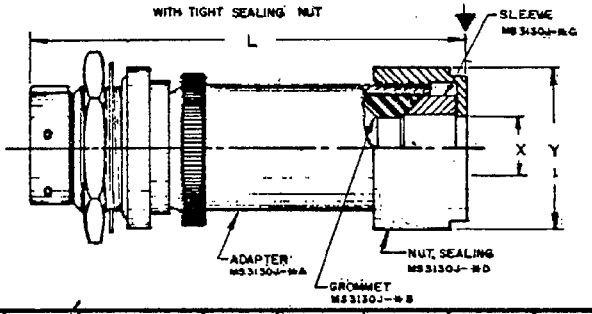

SHELL SIZE DASH NO.	L LENGTH MAX.	X. DIA MIN. I.D. POTTING FORM	Y DIA. MAX. O.D. POTTING FORM
-3	1.640	.261	.391
-7		.372	.515
-12.		.482	.630
-19		.602	.760
-27		.723	.887
-37		.857	1.047

SHELL SIZE DASH NO.	L LENGTH MAX.	X CABLE SEALING MIN.	X CABLE SEALING MAX.	Y MAX. DIA. NUT	ADAPTOR MS3130J-#A	GROMMET MS3130J-#B	SLEEVE MS3130J-#C	NUT SEALING MS3130J-#D
-3	1.641	.178	.210	.645	MS3130J-3A	MS3130J-3B	MS3130J-3C	MS3130J-3D
-7	2.625	.381	.413	.926	MS3130J-7A	MS3130J-7B	MS3130J-7C	MS3130J-7D
-12	3.093	.412	.444	.988	MS3130J-12A	MS3130J-12B	MS3130J-12C	MS3130J-12D
-19	3.125	.522	.554	1.113	MS3130J-19A	MS3130J-19B	MS3130J-19C	MS3130J-19D
-27	3.125	.600	.632	1.113	MS3130J-27A	MS3130J-27B	MS3130J-27C	MS3130J-27D
-37	3.156	.662	.694	1.176	MS3130J-37A	MS3130J-37B	MS3130J-37C	MS3130J-37D

DIMENSIONS IN INCHES UNLESS OTHERWISE SPECIFIED, TOLERANCE. DECIMALS ±.005, ANGULAR TOLERANCE ± 1/2°

MP — MAX CABLE WEIGHTS IN POUNDS (ALLOWABLE FORCE IN DIRECTION INDICATED)

SHELL SIZE	MAX. WEIGHT
-3	2.0
-7	2.7
-12	4.0
-19	5.5
-27	8.0
-37	12.0

NOTES:

1. FOR CLASS J ADAPTER, SEALING NUT, SLEEVE AND GROMMET SEE MS 3130 SHEET 3.
2. FOR CLASS P LOCKWASHER, MOUNTING NUT AND "O" RING SEE SHEET 3.

EXAMPLE OF PART NO.

MS 3134 J 19-50 S Y

MS NUMBER — CLASS — SIZE — INSERT ARRANGEMENT — CONTACT STYLE — ALTERNATE INSERT POSITION

FED. SUP CLASS 5935

APPROVED 14 MAY 59 REVISED (F) FOR CHANGES SEE SHEETS 1,2,3 & 4.

This military standard is approved by the Department of Defense and is mandatory for use by all Departments & Agencies of the Department of Defense. Selection for all new engineering and design applications and for repetitive use shall be made from this document.

DD FORM 10 APR 64 672 (Coordinated) PREVIOUS EDITIONS OF THIS FORM ARE OBSOLETE.

P.A. NAVY - AS
Other Cust USAF-17 ARMY-EL
Procurement Specification MIL-C-81703
International Interest
SUPERSEDES:

TITLE
CONNECTOR, RECEPTACLE, ELECTRIC, SOLDER TYPE, JAM NUT MOUNTING, PUSH-PULL COUPLING (CLASS E, P, J AND H) SERIES I

MILITARY STANDARD

MS 3134

SHEET 3

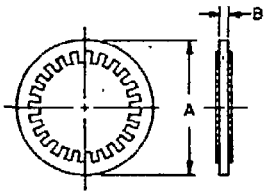

LOCKWASHER

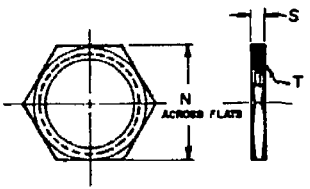

NUT, MOUNTING

EXAMPLE OF PART NO. MS 3134 E - 3 A
MS NUMBER | CLASS | CONNECTOR SHELL SIZE | LOCKWASHER

EXAMPLE OF PART NO. MS 3134 E - 3 B
MS NUMBER | CLASS | CONNECTOR SHELL SIZE | NUT, MOUNTING

CONNECTOR SHELL SIZE (REF) DASH NO.	LOCKWASHER A O.D.	LOCKWASHER B +.000 -.007 THICK.	NUT, MOUNTING N	NUT, MOUNTING S THICK.	NUT, MOUNTING T THREAD SIZE	"O" RING MS NUMBER
-3	.770	.015	.625	.082	9/16-24 UNEF	MS29513-15
-7	.955		.812	.125	11/16-24 UNEF	MS29513-17
-12	1.062		.937		13/16-20 UNEF	MS29513-19
-19	1.192		1.062		1-20 UNEF	MS29513-22
-27	1.438		1.250		1 1/8-18 UNEF	MS29513-24
-37	1.438		1.375		1 1/4-18 UNEF	MS29513-26

DIMENSIONS IN INCHES
UNLESS OTHERWISE SPECIFIED, TOLERANCE: DECIMALS ±.016
ANGULAR TOLERANCE ± 1/2°

NOTES:

1. A INDICATES LOCKWASHER.
   B INDICATES NUT, MOUNTING.
2. THESE LOCKWASHERS AND MOUNTING NUTS ARE INTENDED FOR USE ON MS3134 & 3144 CONNECTORS.
3. LOCKWASHERS—
   MATERIAL TO BE PHOSPHOROUS BRONZE
   NUT, MOUNTING—
   MATERIAL "CLASS E"—ALUMINUM.
   "CLASS H"—STEEL.

FED. SUP CLASS 5935

APPROVED 14 MAY 59. REVISED (F) FOR CHANGES SEE SHEETS 1,2,3 &4.

This military standard is approved by the Department of Defense and is mandatory for use by all Departments & Agencies of the Department of Defense. Selection for all new engineering and design applications and for repetitive use shall be made from this document

P.A. NAVY-AS

Other Cust USAF-17 ARMY-EL

International Interest

Procurement Specification MIL-C-81703

TITLE CONNECTOR, RECEPTACLE, ELECTRIC, SOLDER TYPE JAM NUT MTG. PUSH-PULL COUPLING, SERIES I (CLASS E, P, J AND H)

SUPERSEDES:

MILITARY STANDARD

MS 3134

SHEET 4

FED. SUP CLASS 5935

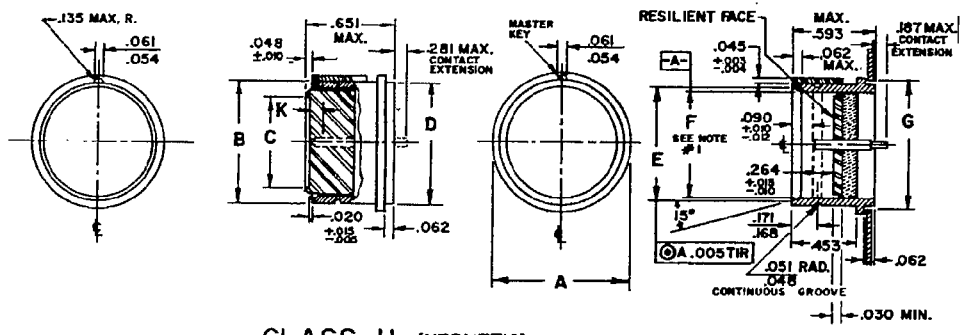

CLASS H (HERMETIC)

STYLE S (SOCKET INSERT) — STYLE P (PIN INSERT)

SHELL SIZE DASH NO.	A MAX. DIA. FLANGE	B ±.004 SHELL O.D.	C INSERT SEAL I.D.	D DIA +.000 -.004	K POINT OF SPRING CONTACT	E +.002-.003 BALL GROOVE DIA.	F ±.004 SHELL I.D.	G (REF) ±.010 MOUNTING HOLE DIA.	FOR INSERT ARRANGEMENT SEE DWG NO.
-3	.608	.435	.304	.500	.138 MAX. MEASURE WITH SQUARE NOSE PIN HAVING BASIC DIAMETER OF MATING CONTACT	.396	.364	.531	MS 33698
-7	.776	.570	.380	.625		.531	.480	.656	MS 33699
-12	.891	.705	.520	.749		.666	.621	.781	MS 33700
-19	1.016	.844	.660	.875		.804	.760	.906	MS 33701
-27	1.188	1.000	.815	1.062		.959	.915	1.093	MS 33702
-37	1.297	1.120	.937	1.156		1.081	1.037	1.187	MS 33703

NOTES:

1. "F" DIAMETER MAY BE .005 LARGER FOR THE FIRST .125 INCH THAN AT THE BOTTOM OF THE BORE.
2. TRUE POSITION (T.P.) TOLERANCES SPECIFIED ARE IN ACCORDANCE WITH USASI Y14.5-1966 (ANSI).
3. DIMENSIONS LOCATING TRUE POSITIONS ARE BASIC.

EXAMPLE OF PART NO. MS 3134 H 19Y50 PX

MS SHELL — CLASS — SIZE — ARRANGEMENT — STYLE(PORS) — INSERT POSITION

CONTACT TERMINATION: Y=EYELET, C=SOLDER CUP

DIMENSIONS IN INCHES
UNLESS OTHERWISE SPECIFIED, TOLERANCES ±.016 (DECIMALS)
ANGULAR TOLERANCE ± 1/2°

APPROVED 14 MAY 1959 REVISED (F) FOR CHANGES SEE SHEETS 1,2,3 &4.

DD FORM 1 APR 64 672 (Coordinated) PREVIOUS EDITIONS OF THIS FORM ARE OBSOLETE.

☆ U.S. GOVERNMENT PRINTING OFFICE: 1971-714-157/1402