This military standard is approved by the Department of Defense and is mandatory for use by all Departments & Agencies of the Department of Defense. Selection for all new engineering and design applications and for repetitive use shall be made from this document.

DD FORM 10 APR 64 672

P.A. NAVY-AS

Other Cust: USAF-11 ARMY-EL

Procurement Specification MIL-C-81703

International Interest

TITLE CONNECTOR, RECEPTACLE, ELECTRIC, DUMMY STOWAGE, WALL MTG. FLANGE, PUSH-PULL COUPLING SERIES I AND 2 CONNECTORS

SUPERSEDES:

MS 3135

MILITARY STANDARD

SHEET 1 OF 1

5935-1761-13

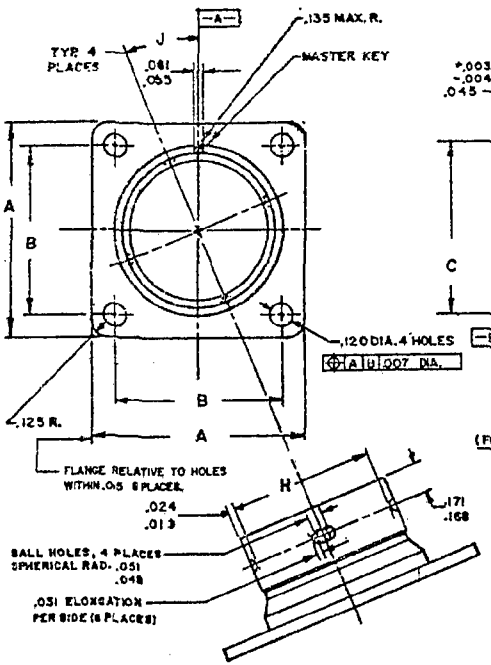

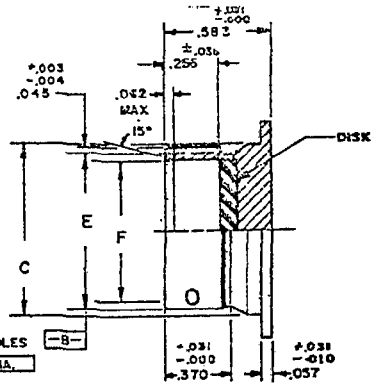

CLASS A
(FOR USE WITH SOCKET CONTACT PLUGS)

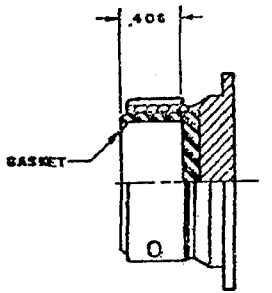

CLASS B
(FOR USE WITH PIN CONTACT PLUGS)

SHELL SIZE DASH NO. *	A MAX LENGTH SIDE	B BSC MTG. CENTERS	C MAX. DIA. FRONT	E +.006 -.004 SHELL O.D.	F +.003 -.007 SHELL I.D.	H +.002 -.003 BALL HOLE SPACING	J BALL HOLE LOCATION
-3	.896	.623	.578	.435	.364	.396	30°
-7	1.021	.719	.691	.570	.480	.531	
-12	1.114	.812	.828	.704	.621	.666	
-19	1.206	.906	.953	.843	.760	.804	±2 ½°
-27	1.302	.968	1.136	.998	.915	.959	
-37	1.458	1.187	1.266	1.120	1.037	1.021	

DIMENSIONS IN INCHES UNLESS OTHERWISE SPECIFIED.
TOLERANCES: DECIMALS ±.010 ANGULAR TOLERANCE ±1/2°.
* A OR B (CLASS)

MATERIAL: SHELL; ALUMINUM ALLOY CONFORMING TO MIL-C-26482.
DISK: CLOSED CELL NEOPRENE SPONGE PER MIL-C-3133 CLASS 5B OR 5C.
GASKET: SYNTHETIC RUBBER, MIL-STD-417 55±10 DUROMETER.

EXAMPLE OF PART NO.

MS 3135 - 19 A

MS NUMBER — SIZE — CLASS

THESE PARTS ARE INTENDED FOR USE AS HOLDING RECEPTACLES FOR STOWAGE OF MS3137, MS3138, MS3147 & MS3148 PLUGS.

NOTES:
1. TRUE POSITION (T.P.) TOLERANCES SPECIFIED ARE IN ACCORDANCE WITH MIL-STD-8.
2. DIMENSIONS LOCATING TRUE POSITIONS ARE BASIC.

THIS STANDARD TAKES PRECEDENCE OVER DOCUMENTS REFERENCED HEREIN. REFERENCED DOCUMENTS SHALL BE OF THE ISSUE IN EFFECT ON DATE OF INVITATION FOR BID.

FED. SUP CLASS 5935

APPROVED 25 APRIL 1961 REVISED (A) 10 SEPT 1962 (B) 1 NOV 1963 (C) [illegible] (D) 21 JULY 1971