This military standard is approved by the Department of Defense and is mandatory for use by all Departments & Agencies of the Department of Defense. Selection for all new engineering and design applications and for repetitive use shall be made from this document.

DD FORM 1 NOV 64 672

P.A. NAVY-AS
Other Cust ARMY-EL

Procurement Specification MIL-C-81703

International Interest

SUPERSEDES:

TITLE
CONNECTOR, PLUG, ELECTRIC, SOLDER TYPE
LANYARD, PUSH-PULL COUPLING, SERIES I
(CLASS E, P AND J)

MILITARY STANDARD

MS 3138

SHEET 1 OF 2

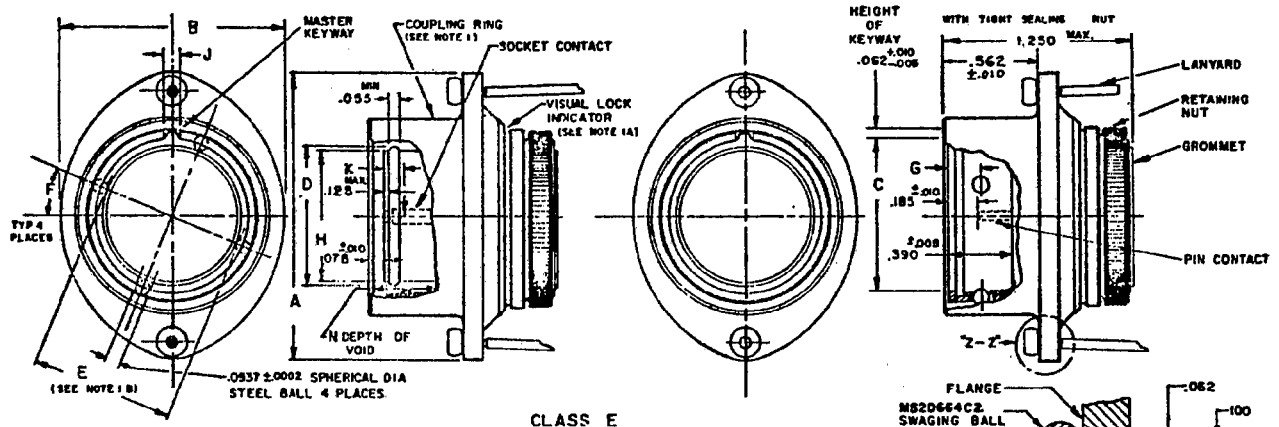

STYLE S (SOCKET INSERT)

CLASS E

STYLE P (PIN INSERT)

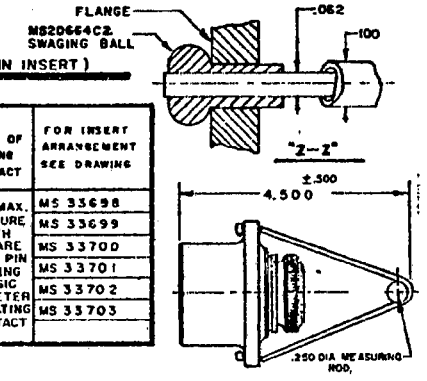

LANYARD DETAIL

SHELL SIZE DASH NO.	A MAX. HEIGHT OF LANYARD FLANGE	B MAX WIDTH OF LANYARD FLANGE	C MIN I.D SHELL	D ±.006 AVERAGE DIA INSERT SEAL	E MIN DIA. BALL SPACING	F BALL LOCATION (ANGULAR)	G +.002 -.005 BALL LOCATION (DEPTH)	H ±.010 FRONT O.D. OF INSERT	J MAX. WIDTH OF KEYWAY	N ±.031 DEPTH OF VOID	K POINT OF SPRING CONTACT	FOR INSERT ARRANGEMENT SEE DRAWING
-3	1.261	925	.444	.374	.391	30°	.202	.344	.114	IN DISENGAGED POSITION .316	.138 MAX. MEASURE WITH SQUARE NOSE PIN HAVING BASIC DIAMETER OF MATING CONTACT	MS 33698
-7	1.411	1.062	.579	.490	.526	$22\frac{1}{2}°$		.460				MS 33699
-12	1.531	1.172	.713	.630	.661			.600				MS 33700
-19	1.681	1.328	.852	.770	.799			.740				MS 33701
-27	1.826	1.473	1.007	.925	.954			.895				MS 33702
-37	1.914	1.609	1.127	1.047	1.076			1.017				MS 33703

DIMENSIONS IN INCHES
UNLESS OTHERWISE SPECIFIED, TOLERANCE: DECIMALS ±.016
ANGULAR TOLERANCE ± 1/2°

NOTES
1. COUPLING RING AND BALLS ARE SHOWN IN THE ENGAGED POSITION FOR CLARITY. THIS POSITION SHALL ONLY BE POSSIBLE WHEN ENGAGED TO THE RECEPTACLE.
IN THE NORMAL DISENGAGED POSITION THE FOLLOWING IS TRUE.
A. THE VISUAL LOCK INDICATOR IS NOT IN VIEW.
B. THE BALLS ARE RELEASED WHEN "E" MIN EQUALS "C".

NOTE 2.

EXAMPLE OF PART NO. MS 3138 E 19-50 S Y

MS NUMBER — CLASS — SIZE — INSERT ARRANGEMENT — CONTACT STYLE — ALTERNATE INSERT POSITION

THIS STANDARD TAKES PRECEDENCE OVER DOCUMENTS REFERENCED HEREIN. REFERENCED DOCUMENTS SHALL BE OF THE ISSUE IN EFFECT ON DATE OF INVITATION FOR BID.

FED. SUP CLASS 5935

APPROVED 10 SEPT 62 REVISED (A) 1 NOV 1965 (B) 6 MAR 67 (C) 20 JAN 1969 (D) 21 JULY 1971

5935-1761-5

This military standard is approved by the Department of Defense and is mandatory for use by all Departments & Agencies of the Department of Defense. Selection for all new engineering and design applications and for repetitive use shall be made from this document.

DD FORM 10 APR 64 672 (Coordinated) PAEV.

P.A. NAVY-AS
Other Cust
ARMY-EL

Procurement Specification
MIL-C-81703

International Interest

SUPERSEDES:

TITLE
CONNECTOR, PLUG, ELECTRIC, SOLDER TYPE, LANYARD PUSH-PULL COUPLING, SERIES I
(CLASS E, P AND J)

MILITARY STANDARD

MS 3138

SHEET 2

CLASS P

POTTED SEAL

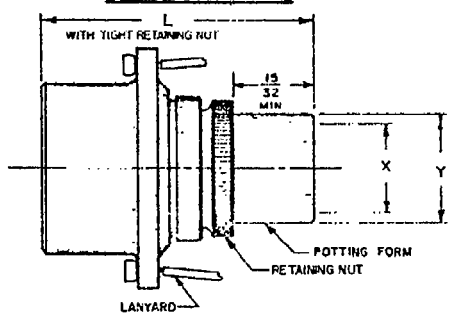

SHELL SIZE DASH NO	L LENGTH MAX	X DIA. MIN. ID POTTING FORM	Y DIA. MAX. OD POTTING FORM
-3	1.718	.261	.391
-7		.372	.515
-12		.482	.610
-19		.607	.760
-27		.725	.887
-37		.857	1.047

CLASS J

JACKETED CABLE GLAND SEAL

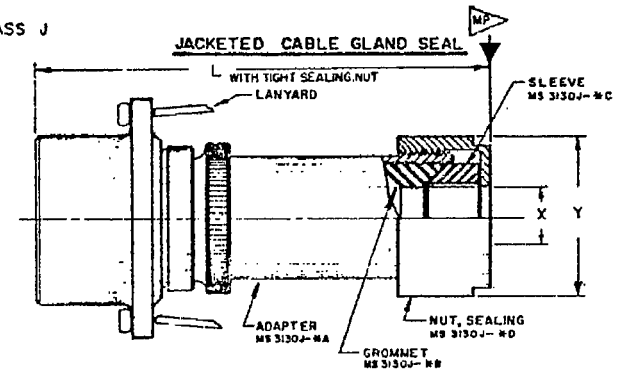

SHELL SIZE DASH NO	L LENGTH MAX.	X CABLE SEALING MIN.	X CABLE SEALING MAX.	Y MAX DIA. NUT	ADAPTER MS3130J-#A	GROMMET MS3130J-#B	SLEEVE MS3130J-#C	NUT SEALING MS3130J-#D
-3	1.734	.178	.210	.645	MS3130J-3A	MS3130J-3B	MS3130J-3C	MS3130J-3D
-7	2.719	.381	.413	.926	MS3130J-7A	MS3130J-7B	MS3130J-7C	MS3130J-7D
-12	3.188	.412	.444	.988	MS3130J-12A	MS3130J-12B	MS3130J-12C	MS3130J-12D
-19	3.219	.522	.554	1.113	MS3130J-19A	MS3130J-19B	MS3130J-19C	MS3130J-19D
-27	3.219	.600	.632	1.113	MS3130J-27A	MS3130J-27B	MS3130J-27C	MS3130J-27D
-37	3.250	.662	.694	1.176	MS3130J-37A	MS3130J-37B	MS3130J-37C	MS3130J-37D

DIMENSIONS IN INCHES UNLESS OTHERWISE SPECIFIED
TOLERANCE DECIMALS ±.016, ANGULAR TOLERANCE ±1/2°.

NOTES
1 FOR CLASS J ADAPTER, SEALING NUT, SLEEVE AND GROMMET SEE MS 3130 SHEET 3

MP MAX CABLE WEIGHTS IN POUNDS (ALLOWABLE FORCE IN DIRECTION INDICATED).

SHELL SIZE	MAX WEIGHT
-3	2.0
-7	2.7
-12	4.0
-19	5.5
-27	8.0
-37	12.0

EXAMPLE OF PART NO

MS 3138 J 19-50 S Y

MS NUMBER | CLASS | SIZE | INSERT ARRANGEMENT | CONTACT STYLE | ALTERNATE INSERT POSITION

THIS STANDARD TAKES PRECEDENCE OVER DOCUMENTS REFERENCED HEREIN. REFERENCED DOCUMENTS SHALL BE OF THE ISSUE IN EFFECT ON DATE OF INVITATION FOR BID

FED. SUP CLASS
5935

APPROVED 10 SEP 62 REVISED (D) FOR CHANGES SEE SHEETS 1 & 2.

-K OBSOLETE.