This military standard is approved by the Department of Defense and is mandatory for use by all Departments & Agencies of the Department of Defense. Selection for all new engineering and design applications and for repetitive use shall be made from this document.

P.A. NAVY-AS

Other Cust USAF-11 ARMY-EL

Procurement Specification MIL-C-81703

International interest

TITLE CONNECTOR, RECEPTACLE, ELECTRIC THRU BULKHEAD, WALL MTG. FLANGE, SERIES I (CLASS E)

SUPERSEDES:

MILITARY STANDARD

MS3139

SHEET 1 OF 1

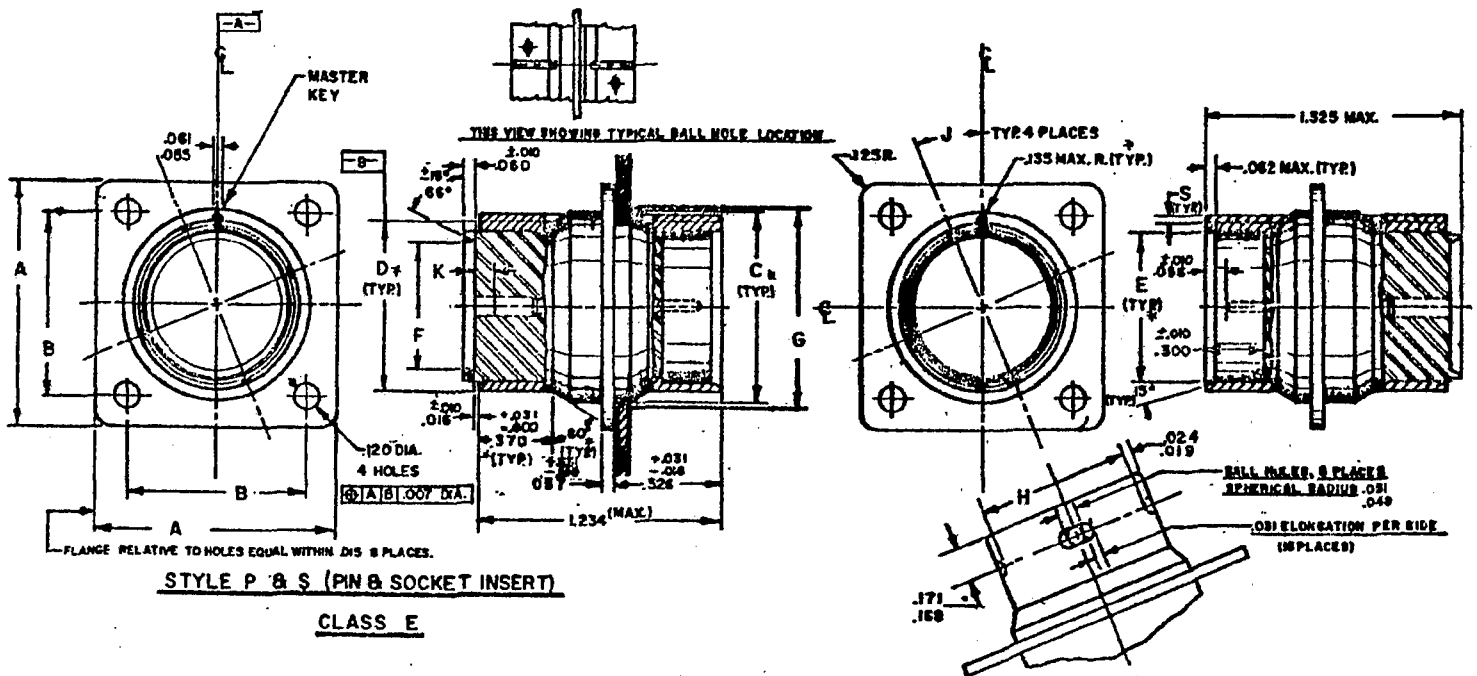

STYLE P & S (PIN & SOCKET INSERT)

CLASS E

SHELL SIZE DASH NO.	A MAX LENGTH SIDE	B BSC MOUNTING CENTERS	C MAX. DIA. FRONT & REAR (TYP)	D +.006 -.004 SHELL O.D.	E +.003 -.007 SHELL I.D.	F INSERT SEAL I.D.	G MIN. DIA. MOUNTING HOLE	H +.003 -.005 BALL HOLE SPACING	J BALL HOLE LOCATION	K POINT OF SPRING CONTACT	S +.003 -.004 HEIGHT OF KEY	FOR INSERT ARRANGEMENT SEE DWG.
-3	.896	.625	.578	.435	.364	.244	.632	.396	30°	.156 MAX. MEASURED WITH SOCKET HOLE PIN MINUS BASIC DIAMETER OF MATING CONTACT	.045	MS33698
-7	1.021	.719	.691	.570	.480	.370	.698	.531	22½°			MS33699
-12	1.114	.812	.828	.704	.621	.510	.835	.666				MS33700
-19	1.208	.906	.953	.843	.760	.650	.960	.804				MS33701
-27	1.302	.968	1.136	.998	.915	.803	1.143	.939				MS33702
-37	1.456	1.187	1.266	1.120	1.037	.927	1.273	1.081				MS33703

DIMENSIONS IN INCHES, UNLESS OTHERWISE SPECIFIED.
TOLERANCE: DECIMALS ±.010 ANGULAR TOLERANCE ±1/2°

NOTES:
1. TRUE POSITION (T.P.) TOLERANCES ARE IN ACCORDANCE WITH MIL-STD-9.
2. DIMENSIONS LOCATING TRUE POSITIONS ARE BASIC.

EXAMPLE OF PART NO. MS3139 E 19-50 S Y

MS NUMBER — CLASS — SIZE — INSERT ARR. — CONTACT STYLE — ALTERNATE INSERT POSITION

THIS STANDARD TAKES PRECEDENCE OVER DOCUMENTS REFERENCED HEREIN. REFERENCED DOCUMENTS SHALL BE OF THE ISSUE IN EFFECT ON DATE OF INVITATION FOR BID.

FED. SUP CLASS 5935

APPROVED 27 JUL. 60 REVISED (A) 10 SEPT 1962 (B) 2 NOV 1965 (C) 6 Mar 67. (D) 21 JULY 1971

DD FORM 10, APR 64 672 (Coordinated) PRE

5935-1751-6