This military standard is approved by the Department of Defense and is mandatory for use by all Departments & Agencies of the Department of Defense. Selection for all new engineering and design applications and for repetitive use shall be made from this document.

P.A. NAVY-AS

Other Cust USAF-11 ARMY-EL

Procurement Specification MIL-C-81703

International Interest

DD FORM 10 APR 64 672

TITLE CONNECTOR, RECEPTACLE, ELECTRIC, CRIMP TYPE, WALL MOUNTING FLANGE, PUSH-PULL COUPLING, SERIES 2 (CLASS E AND J)

SUPERSEDES.

MILITARY STANDARD

MS 3140

SHEET 1 OF 3

5935-1761-7

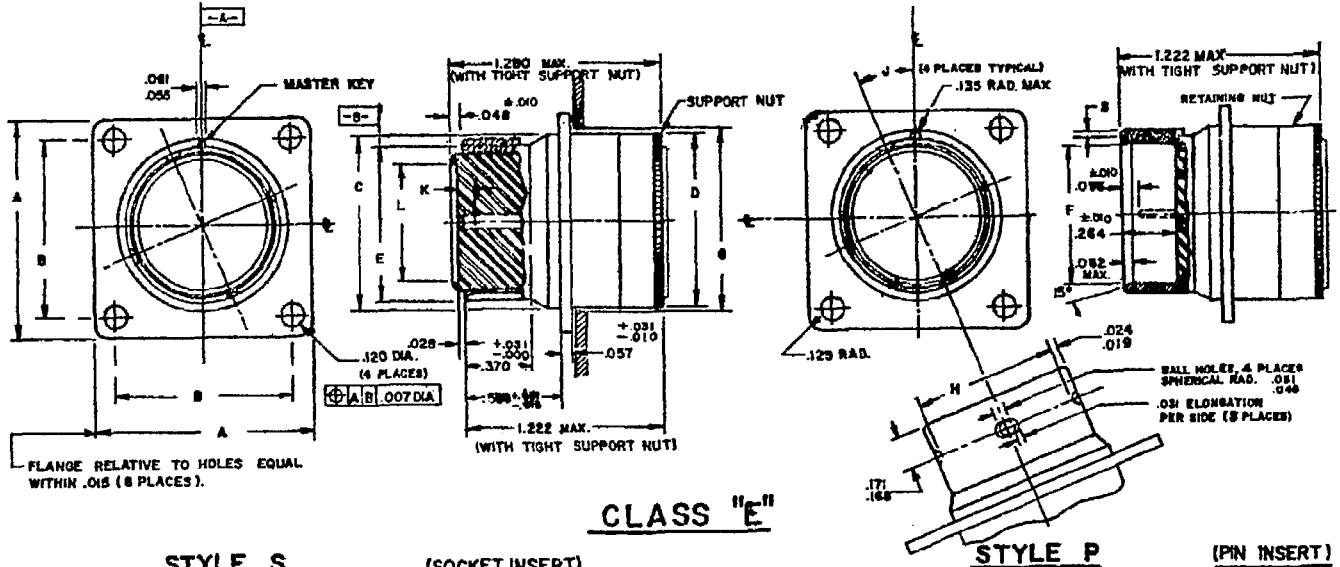

CLASS "E"

STYLE S (SOCKET INSERT)

STYLE P (PIN INSERT)

SHELL SIZE DASH NO.	A MAX. LENGTH SIDE	B BSC. MOUNTING CENTERS	C MAX. DIA. FRONT	D MAX DIA. REAR	E +.006 -.004 SHELL O. D.	F +.005 -.007 SHELL I. D.	G MIN. DIA. MOUNTING HOLE	H +.002 -.005 BALL HOLE SPACING	J BALL HOLE LOCATION	K POINT OF SPRING CONTACT	L INSERT SEAL I.D.	S +.005 -.005 HEIGHT OF KEY	FOR INSERT ARRANGEMENT SEE DRAWING
-3	.896	.625	.578	.625	.435	.364	.832	.396	30°	.138 MAX. MEASURE WITH SQUARE NOSE PIN HAVING BASIC DIAMETER OF MATING CONTACT	.264	.045	MS-33698
-7	1.021	.719	.691	.702	.570	.480	.709	.531	$22\frac{1}{2}°$		.380		MS 33699
-12	1.114	.812	.828	.828	.704	.621	.835	.666			.520		MS 33700
-19	1.208	.906	.953	.953	.843	.760	.960	.804			.660		MS 33701
-27	1.302	.988	1.136	1.102	.998	.915	1.143	.959			.815		MS 33702
-37	1.458	1.187	1.266	1.266	1.120	1.037	1.273	1.081			.937		MS 33703

EXAMPLE OF PART NO: MS 3140 E 19-50 S Y

MS NUMBER — CLASS — SIZE — INSERT ARRANGEMENT — CONTACT STYLE — ALTERNATE INSERT POSITION

NOTES:

1. TRUE POSITION (T.P.) TOLERANCES SPECIFIED ARE IN ACCORDANCE WITH MIL-STD-8.
2. DIMENSIONS LOCATING TRUE POSITIONS ARE BASIC.

DIMENSIONS IN INCHES
UNLESS OTHERWISE SPECIFIED, TOLERANCE DECIMALS: ±.016
ANGULAR TOLERANCE: ± 1/2°

THIS STANDARD TAKES PRECEDENCE OVER DOCUMENTS REFERENCED HEREIN. REFERENCED DOCUMENTS SHALL BE OF THE ISSUE IN EFFECT ON DATE OF INVITATION FOR BID.

FED. SUP CLASS 5935

APPROVED 10 SEPT 62 REVISED (A) 1 NOV 1965 (B) 6 Mar 67 (C) 21 JULY 1971

This military standard is approved by the Department of Defense and is mandatory for use by all Departments & Agencies of the Department of Defense. Selection for all new engineering and design applications and for repetitive use shall be made from this document.

DD FORM 10 APR 64 672 (Coordinated) PREVIO

P.A. NAVY-AS

Other Cust USAF-11 ARMY-EL

Procurement Specification MIL-C-81703

International Interest

TITLE CONNECTOR, RECEPTACLE, ELECTRIC, CRIMP TYPE, WALL MOUNTING FLANGE, PUSH-PULL COUPLING. SERIES 2 (CLASS E AND J)

SUPERSEDES:

MILITARY STANDARD

MS3140

SHEET 2

CLASS J

JACKETED CABLE GLAND SEAL

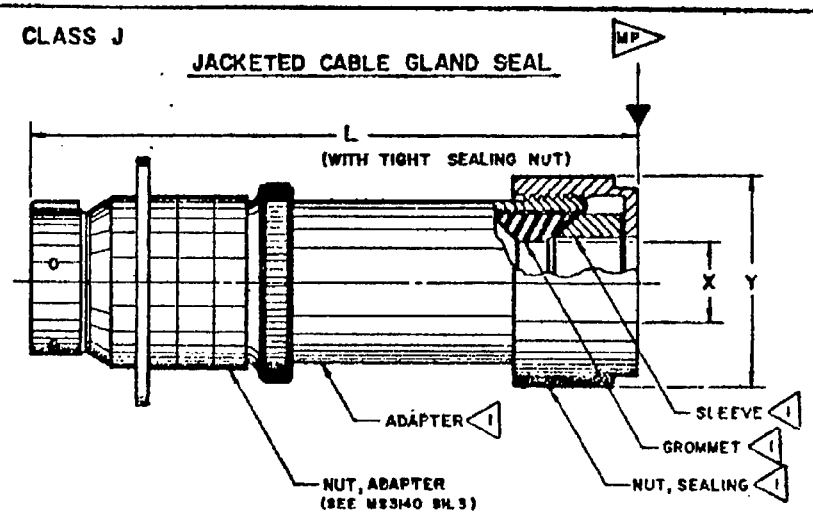

SHELL SIZE DASH NO.	L LENGTH MAX.	X INSIDE DIA. MIN.	X INSIDE DIA. MAX.	Y MAX.	MP MAX CABLE WEIGHTS IN POUNDS. (ALLOWABLE FORCE IN DIRECTION INDICATED)
-3	3.010	.176	.210	.645	2.0
-7	3.994	.381	.413	.928	2.7
-12	4.460	.412	.444	.988	4.0
-19	4.494	.522	.554	1.113	5.5
-27	4.494	.600	.632	1.113	8.0
-37	4.625	.662	.694	1.176	12.0

DIMENSIONS IN INCHES UNLESS OTHERWISE SPECIFIED.
TOLERANCE: DECIMALS ±.016, ANGULAR TOLERANCE ± 1/2°

1 FOR ADAPTER, SEALING NUT, GROMMET & SLEEVE SEE MS 3130 SH. 3.

CLASS J JACKETED CABLE GLAND SEAL- WATERTIGHT TYPE
FOR USE WITH CLASS E CONNECTORS

EXAMPLE OF PART NO.

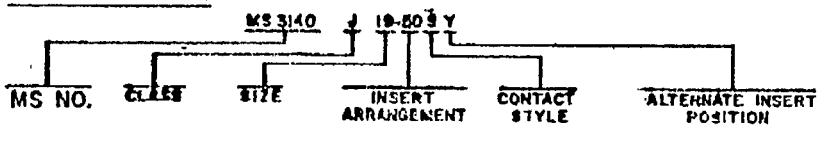

THIS STANDARD TAKES PRECEDENCE OVER DOCUMENTS REFERENCED HEREIN. REFERENCED DOCUMENTS SHALL BE OF THE ISSUE IN EFFECT ON DATE OF INVITATION FOR BID

FED. SUP CLASS 5935

APPROVED 10 SEPT. '62 REVISED (C) FOR CHANGES SEE SHEETS 1,2 & 3.

This military standard is approved by the Department of Defense and is mandatory for use by all Departments & Agencies of the Department of Defense. Selective for all new engineering and design applications and for repetitive use shall be made from this document.

P.A. NAVY-AS

Other Cust USAF-11 ARMY-EL

International Interest

Procurement Specification MIL-C-81703

TITLE CONNECTOR, RECEPTACLE, ELECTRIC, CRIMP TYPE, WALL MOUNTING FLANGE, PUSH-PULL COUPLING.

SERIES 2 (CLASS E AND J)

SUPERSEDES:

MILITARY STANDARD

MS3140

SHEET 3

DD FORM 10 APR 64 672 (Coordinated) PMC

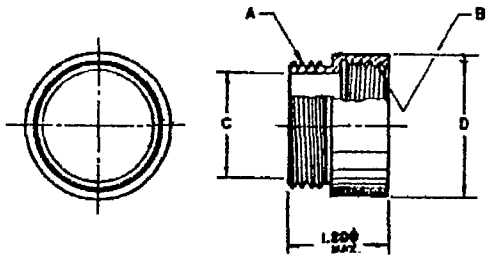

MS3140J-*A ADAPTER NUT, JACKETED CABLE SEALING

SHELL SIZE DASH NO.	A THREAD	B THREAD	C I.D.	D O.D.
-3	1/2-28 UNEF	1/2-28 UNEF	.379	.576
-7	5/8-24 UNEF	5/8-24 UNEF	.479	.687
-12	3/4-20 UNEF	3/4-20 UNEF	.594	.812
-19	7/8-20 UNEF	7/8-20 UNEF	.733	.937
-27	1-20 UNEF	1-20 UNEF	.868	1.087
-37	1-3/16-18 UNEF	1-3/16-18 UNEF	1.024	1.250

DIMENSIONS IN INCHES UNLESS OTHERWISE SPECIFIED.
TOLERANCE: DECIMALS ±.016, ANGULAR TOLERANCE ±1/2°.

EXAMPLE OF PART NO.

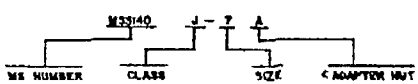

NOTES:

1. SEE MS3140 SH. 2 FOR USE OF ADAPTER NUT.
2. THIS ADAPTER NUT IS INTENDED FOR USE WITH CLASS J CONNECTORS, JACKETED CABLE SEALING, WATERTIGHT TYPE.

THIS STANDARD TAKES PRECEDENCE OVER DOCUMENTS REFERENCED HEREIN. REFERENCED DOCUMENTS SHALL BE OF THE ISSUE IN EFFECT ON DATE OF INVITATION FOR BID.

FED. SUP CLASS 5935

APPROVED 10 SEPT 1962 REVISED (C) FOR CHANGES SEE SHEETS 1, 2 & 3.