This military standard is approved by the Department of Defense and is mandatory for use by all Departments & Agencies of the Department of Defense. Selection for all new engineering and design applications and for repetitive use shall be made from this document.

DD FORM 10 APR 64 672 (Coordinate)

P.A. NAVY-AS
Other Cust USAF-11 ~~ARMY-EL~~
Procurement Specification MIL-C-81703
Intermediate Interest
TITLE CONNECTOR, RECEPTACLE, ELECTRIC CRIMP TYPE, JAM NUT MOUNTING, PUSH-PULL COUPLING (CLASS E AND J)
SERIES 2
SUPERSEDES:

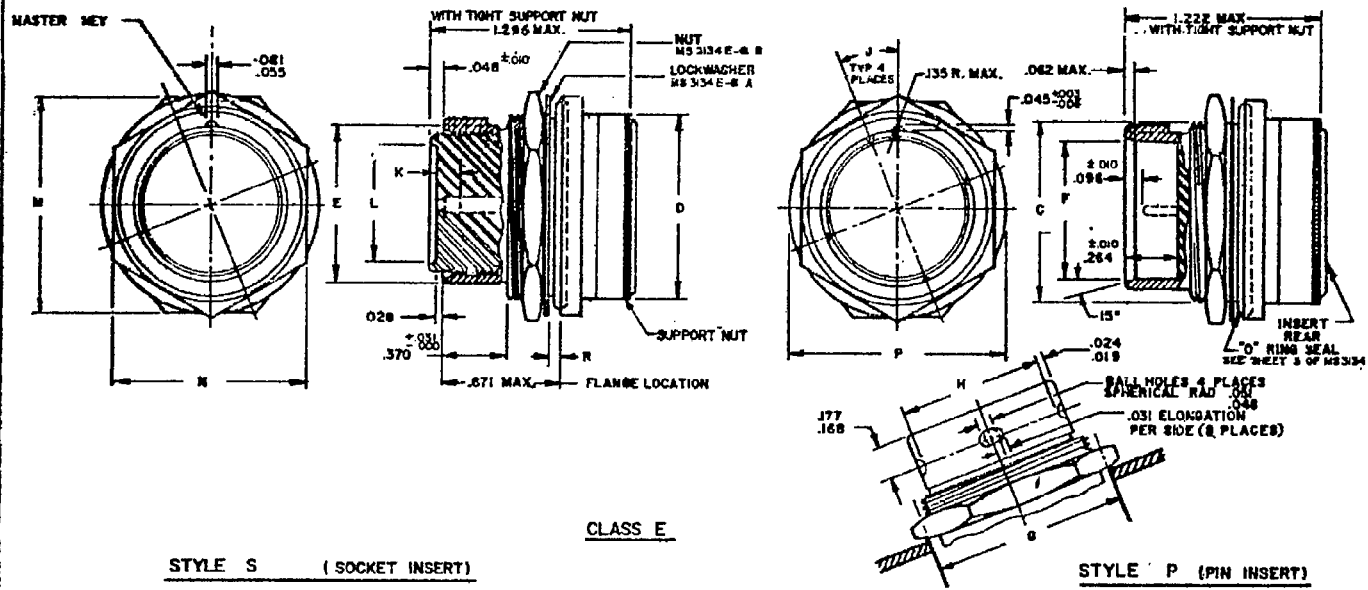

CLASS E

STYLE S (SOCKET INSERT)

STYLE P (PIN INSERT)

SHELL SIZE DASH NO.	C THREAD SIZE	E +.008 -.004 SHELL O.D.	F +.003 -.007 SHELL I.D.	G ±.020 -.005 MTG. HOLE DIA.	H ±.002 -.005 BALL HOLE SPACING	J BALL HOLE LOCATION	K POINT OF SPRING CONTACT	L INSERT SEAL I.D.	M FLATS FLANGE	N FLATS NUT	P DIA. FLANGE 90° FROM FLATS	R MAX. PANEL THK.	D MAX. DIA. REAR	FOR INSERT ARRANGEMENT SEE DWG.
— 3	3/8-24 UNEF-2A	.435	.364	.571	.396	30°	.138 MAX. MEASURE WITH SQUARE NOSE PIN HAVING BASIC DIAMETER OF MATING CONTACT	.264	.750	.625	.750	.062	.625	MS 33698
— 7	7/16-24 UNEF-2A	.570	.480	.696	.531	22½°		380	.875	.812	.875	.093	.702	MS 33699
— 12	15/16-20 UNEF-2A	.704	.621	.818	.666			.520	1.062	.937	1.062		.828	MS 33700
— 19	1-20 UNEF-2A	.843	.760	1.010	.804			.660	1.156	1.062	1.187		.953	MS 33701
— 27	1 1/8-18 UNEF-2A	.998	.915	1.135	.959			.815	1.312	1.250	1.312		1.102	MS 33702
— 37	1 1/4-18 UNEF-2A	1.120	1.037	1.260	1.081			.937	1.420	1.375	1.500		1.266	MS 33703

EXAMPLE OF PART NO. MS3144 E 19-50 S Y D

MS NO. — CLASS — SIZE — INSERT ARRANGEMENT — CONTACT STYLE — ALTERNATE INSERT POSITION

NOTE: FOR DETAILS OF MOUNTING NUT AND LOCKWASHER, SEE MS3134 SHEETS FOR "O" RING SEE MS29513.

DIMENSIONS IN INCHES
UNLESS OTHERWISE SPECIFIED, TOLERANCE, DECIMALS ±.010
ANGULAR TOLERANCE ±1/2°

THIS STANDARD TAKES PRECEDENCE OVER DOCUMENTS REFERENCED HEREIN. REFERENCED DOCUMENTS SHALL BE OF THE ISSUE IN EFFECT ON DATE OF INVITATION FOR BID.

APPROVED 10 SEPT 62 REVISED (A) 1 NOV 1965 (B) 6 Mar 67 (C) 21 JULY 1971

MILITARY STANDARD

MS 3144

SHEET 1 OF 2

FED. SUP CLASS 5935

5935-1761-8

ISOLETE.

This military standard is approved by the Department of Defense and is mandatory for use by all Departments & Agencies of the Department of Defense. Selection for all new engineering and design applications and for repetitive use shall be made from this document.

DD FORM 10 APR 64 672

P.A. NAVY-AS

Other Cust USAF-11 ARMY-EL

Procurement Specification MIL-C-81703

International Interest

TITLE CONNECTOR, RECEPTACLE, ELECTRIC CRIMP TYPE, JAM NUT MOUNTING PUSH-PULL COUPLING SERIES 2 (CLASS E AND J)

SUPERSEDES:

MILITARY STANDARD

MS 3144

SHEET 2

CLASS J

JACKETED CABLE GLAND SEAL

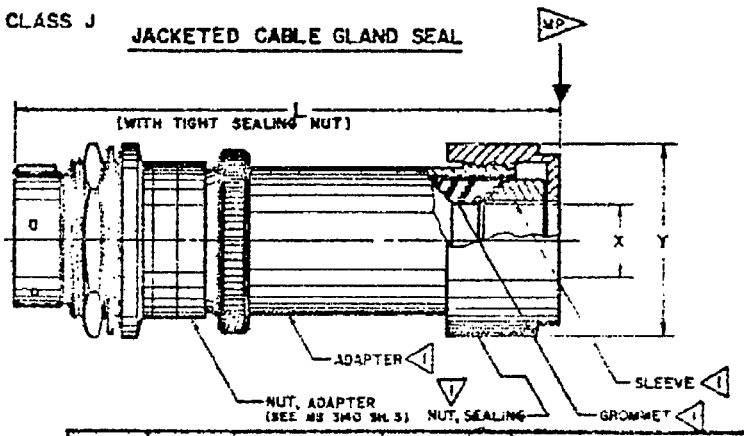

SHELL SIZE DASH NO.	L LENGTH MAX.	X INSIDE DIA. MIN.	X INSIDE DIA. MAX.	Y MAX.	MP MAX CABLE WEIGHTS IN POUNDS (ALLOWABLE FORCE IN DIRECTION INDICATED)
– 3	3.230	.178	.210	.645	2.0
– 7	3.994	.381	.413	.926	2.7
– 12	4.460	.412	.444	.988	4.0
– 19	4.494	.522	.554	1.113	5.5
– 27	4.494	.800	.832	1.113	8.0
– 37	4.525	.862	.894	1.176	12.0

DIMENSIONS IN INCHES UNLESS OTHERWISE SPECIFIED.
TOLERANCE: DECIMALS ±.016, ANGULAR TOLERANCE ±1/2°

1 FOR ADAPTER, SEALING NUT, GROMMET & SLEEVE SEE MS 3130 SH. 3.

CLASS J. JACKETED CABLE GLAND SEAL — WATERTIGHT TYPE – FOR USE WITH CLASS E CONNECTORS.

EXAMPLE OF PART NO.

MS3144 J 19-50 Z Y

MS NUMBER — CLASS — SIZE — INSERT ARRANGEMENT — CONTACT STYLE — ALTERNATE INSERT POSITION

THIS STANDARD TAKES PRECEDENCE OVER DOCUMENTS REFERENCED HEREIN. REFERENCED DOCUMENTS SHALL BE OF THE ISSUE IN EFFECT ON DATE OF INVITATION FOR BID

FED. SUP CLASS 5935

APPROVED 10 SEPT. '62 REVISED (C) FOR CHANGES SEE SHEETS 1 & 2.