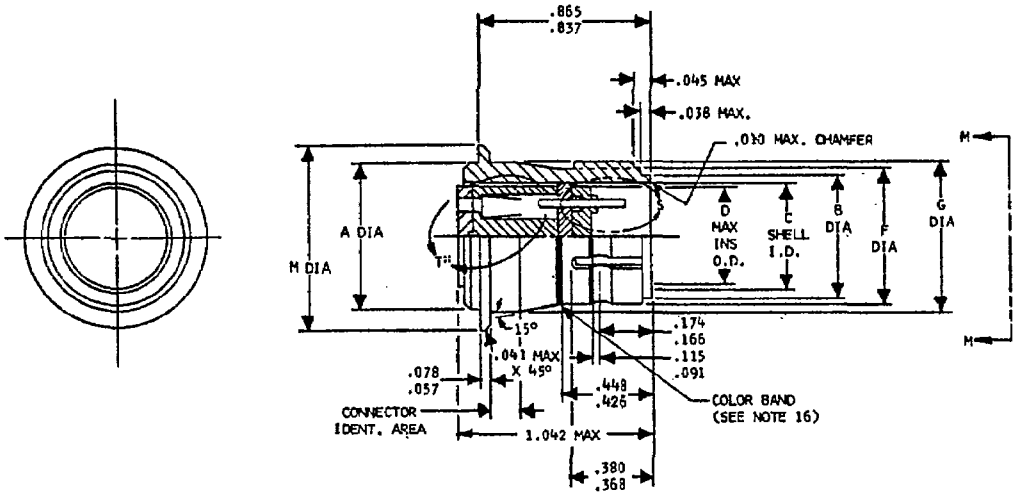

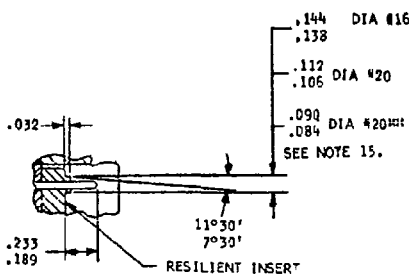

DETAIL S

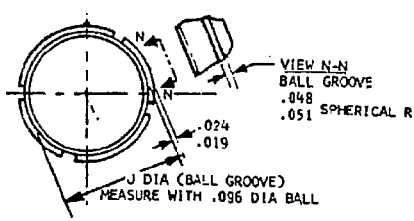

VIEW M-M

FIGURE 1
CONNECTOR VIEW

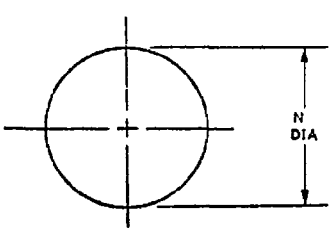

PANEL CUTOUT

SEE SHEET 2 FOR DETAIL T

###ON OUTER ROW CONTACTS OF INSERT ARRANGEMENTS INDICATED IN CHART.

PART NUMBER EXAMPLE:

MS3143 N 3 - 50 P Y

- Y — ALTERNATE INSERT POSITION
- P — CONTACT STYLE (P-PIN)
- 50 — INSERT ARRANGEMENT
- 3 — SHELL SIZE
- N — CLASS
- MS3143 — MS NUMBER

INSERT ARRANGEMENTS REQUIRING REDUCED DIAMETERS FOR PIN CONTACT RAISED SEAL BARRIERS		
SHELL SIZE	INSERT ARRANGE-MENTS	CONTACT CAVITIES
12	12-50	5, 6, 8, 9, 11 & 12

Review activities:
Navy-EC

This standard has been approved by the Department of the Navy and is mandatory for use by that activity. All other military activities are required to employ this standard where suitable.

APPROVED 4 Feb 1972 REVISED

P.A. Navy-AS Other Cust	TITLE CONNECTOR, RECEPTACLE, ELECTRIC, HERMETIC, CRIMP TYPE, SOLDER MOUNTING, PUSH-PULL COUPLING, SERIES 3 (CLASS N)	MILITARY STANDARD MS3146 (NAVY)
PROCUREMENT SPECIFICATION MIL-C-81703	SUPERSEDES	SHEET 1 OF 3

DD FORM 672-1 N LIMITED COORDINAT

Project No. 5935-N668-2

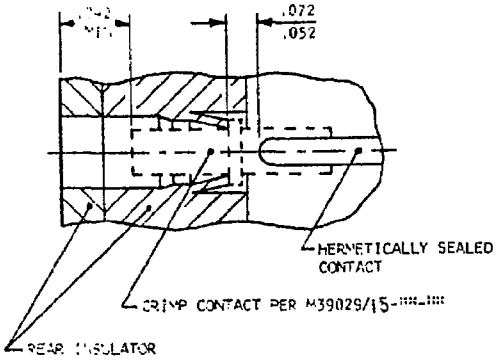

DETAIL T

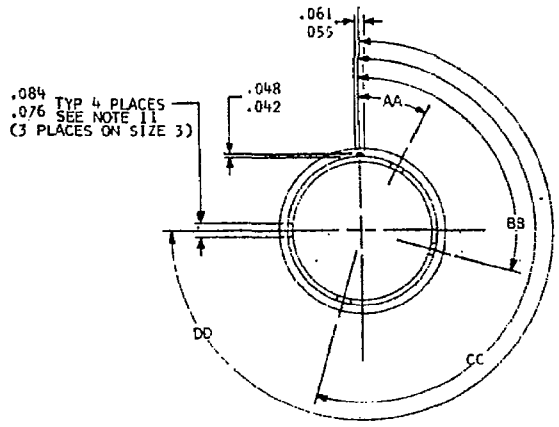

FIGURE II
KEYWAY POSITIONS

ENGAGING ENDS OF CONTACTS

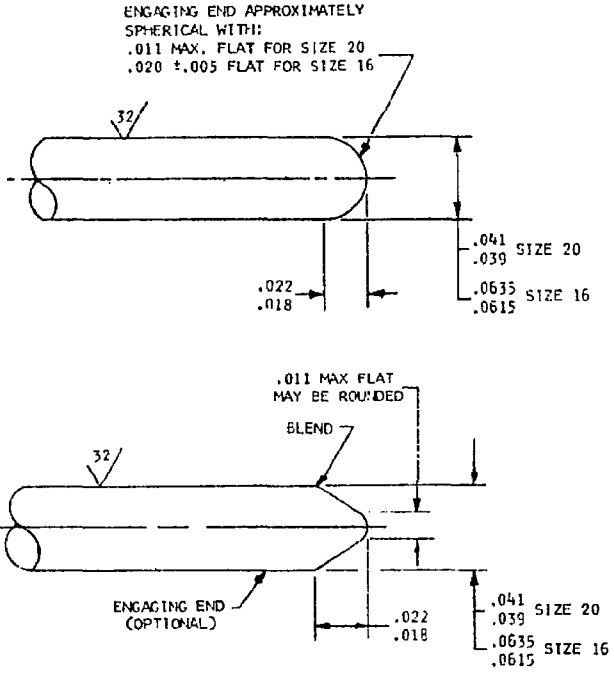

FIGURE III
CONTACT DETAILS

Review activities:
Navy-EC

APPROVED 4 Feb 1972 REVISED

P.A. Navy-AS Other Cust	TITLE CONNECTOR, RECEPTACLE, ELECTRIC, HERMETIC, CRIMP TYPE, SOLDER MOUNTING, PUSH-PULL COUPLING, SERIES 3 (CLASS N)	MILITARY STANDARD MS3146(NAVY)
PROCUREMENT SPECIFICATION MIL-C-81703	SUPERSEDES	SHEET 2

DD FORM 1 SEP 67 672-1 N LIMITED COORDIN

This standard has been approved by the Department of the Navy and is mandatory for use by that activity. All other military activities are required to employ this standard where suitable.

TABLE I
CONNECTOR DIMENSIONS AND WEIGHTS

SHELL SIZE	A	B	C	D	F	G	J	M
3	.497	.392 .385	.367 .356	.330	.441 .431	.531	.398 .391	.602 .582
7	.622	.527 .520	.483 .473	.451	.576 .566	.671	.533 .526	.760 .740
12	.747	.661 .654	.624 .614	.553	.710 .700	.812	.668 .661	.885 .865
19	.904	.800 .793	.763 .753	.738	.849 .839	.937	.806 .799	1.010 .990
27	1.060	.955 .948	.918 .908	.854	1.004 .994	1.125	.961 .954	1.192 1.172
37	1.153	1.077 1.070	1.040 1.030	.976	1.126 1.116	1.218	1.083 1.076	1.291 1.271

SHELL SIZE	N	WEIGHT (LBS) SEE NOTE 7 PIN INSERT
3	.515	(WEIGHT WILL BE
7	.640	SUPPLIED IN
12	.764	LATER REVISION)
19	.922	
27	1.077	
37	1.171	

TABLE II
KEYWAY POSITIONS

SHELL SIZE	AA	BB	CC	DD
3	23°	97°	187°	--
7	23°	97°	187°	277°
12	30°	105°	195°	270°
19	30°	105°	195°	270°
27	30°	105°	195°	270°
37	30°	105°	195°	270°

NOTES: (NOTES 1 THRU 6 APPLICABLE TO CONTACTS ONLY).

1. CONTACT FINISH: GOLD PLATE .000050 INCH MIN IN ACCORDANCE WITH MIL-G-45204. A SUITABLE UNDERPLATING MAY BE USED. SILVER UNDERPLATING SHALL NOT BE USED. FINISH IS APPLIED AFTER SEALING.
2. DIMENSIONS IN INCHES, DIMENSIONS APPLY AFTER PLATING.
3. 63 ALL OVER PER MIL-STD-10, UNLESS OTHERWISE SPECIFIED.
4. REMOVE ALL BURRS AND SHARP EDGES .003 TO .005 R.
5. DIAMETERS TO BE CONCENTRIC WITHIN .004 TIR.
6. DIAMETERS IN THE SAME CROSS-SECTIONAL PLANE TO BE CONCENTRIC WITH EACH OTHER WITHIN .003 TIR.
7. WEIGHT LISTED IS CONNECTOR MAXIMUM WEIGHT PER SHELL SIZE LESS CRIMP CONTACTS.
8. SHELL MATERIAL: COLD ROLLED STEEL, PER QQ-S-637
9. SHELL FINISH: .0001 MIN. TIN PER MIL-T-10727, OVER NICKEL PER QQ-N-290.
10. EACH CONNECTOR SHALL BE PACKAGED WITH A PLASTIC DUST CAP OVER EACH END OF SHELL.
11. FOUR KEYWAYS (MMC) AND INSERT SHALL BE LOCATED WITHIN .004 EITHER SIDE OF (TP) RELATIVE TO MASTER KEYWAY (MMC) AND SHELL O.D. (MMC).
12. DIMENSIONS IN INCHES. UNLESS OTHERWISE SPECIFIED, TOLERANCE SHALL BE .XX ± .010 AND .XXX ± .005; ANGULAR TOLERANCE, X° ±1°-0' AND X°X' ± 30'.
13. INSERTION/REMOVAL TOOL, MS3160-### TO BE USED WITH THIS CONNECTOR.
14. CONTACT MIL-C-39029/15-### MUST BE USED FOR WIRE TERMINATIONS.
15. DIAMETERS SHOWN ARE AT BASE OF BARRIER.
16. COLOR BAND: (A) .070 ±.031 WIDE, COLOR BLUE.
    (B) BAND LOCATION MUST BE SUCH THAT IT IS VISIBLE WHEN MOUNTED.
17. MAXIMUM WIRE DIAMETER PERMISSIBLE: .074 FOR SIZE 20 CONTACT, .103 FOR SIZE 16 CONTACT.

Review activities:
Navy-EC

This standard has been approved by the Department of the Navy and is mandatory for use by that activity. All other military activities are required to employ this standard where suitable.

APPROVED 4 Feb 1972 REVISED

P.A: Navy-AS Other Cust	TITLE CONNECTOR, RECEPTACLE, ELECTRIC, HERMETIC, CRIMP TYPE, SOLDER MOUNTING, PUSH-PULL COUPLING, SERIES 3 (CLASS N)	MILITARY STANDARD MS3146 (NAVY)
PROCUREMENT SPECIFICATION MIL-C-81703	SUPERSEDES	SHEET 3