This military standard is approved by the Department of Defense and is mandatory for use by all Departments & Agencies of the Department of Defense. Selection for all new engineering and design applications and for repetitive use shall be made from this document.

DD FORM 10 APR 64 672

P.A. NAVY-AS
Other Cust ARMY-EL
Procurement Specification: MIL-C-81703
International Interest

TITLE CONNECTOR, PLUG, ELECTRIC CRIMP TYPE, PUSH-PULL COUPLING SERIES 2 (CLASS E AND J)
SUPERSEDES:

MILITARY STANDARD
MS 3147
SHEET 1 OF 2

5935-1761-9

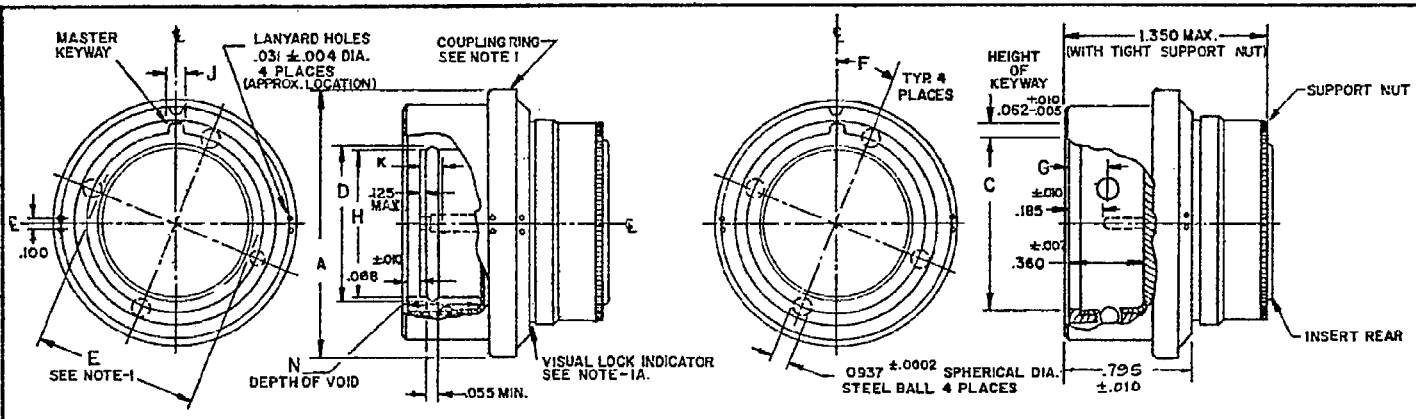

STYLE S (SOCKET INSERT)

STYLE P (PIN INSERT)

CLASS E

SHELL SIZE DASH NO.	A MAX DIA. COUPLING RING	C MIN I.D. SHELL	D ±.006 AVERAGE DIA. INSERT SEAL	E MIN. DIA. BALL SPACING	F BALL LOCATION (ANGULAR)	G +.002 -.005 BALL LOCATION (DEPTH)	H DIA. OF INSERT	J MAX WIDTH OF KEYWAY	N ±.031 DEPTH OF VOID	K POINT OF SPRING CONTACT	FOR INSERT ARRANGMENT SEE DRAWING
-3	.840	.444	.374	.391	30°	.202	.344	.114	.310 IN DISENGAGED POSITION	.138 MAX. MEASURE WITH SQUARE NOSE PIN HAVING BASIC DIAMETER OF MATING CONTACT	MS 33698
-7	.970	.579	.490	.526	$22\frac{1}{2}°$		.460				MS 33699
-12	1.090	.713	.630	.661			.600				MS 33700
-19	1.280	.852	.770	.799			.740				MS 33701
-27	1.455	1.007	.925	.954			.895				MS 33702
-37	1.590	1.127	1.047	1.076			1.017				MS 33703

NOTE: 1
COUPLING RING AND BALLS ARE SHOWN IN THE ENGAGED POSITION FOR CLARITY THIS POSITION SHALL ONLY BE POSSIBLE WHEN ENGAGED TO THE RECEPTACLE.
IN THE NORMAL DISENGAGED POSITION THE FOLLOWING IS TRUE:
A. THE VISUAL LOCK INDICATOR IS NOT IN VIEW.
B. THE BALLS ARE RELEASED WHEN "E" MIN. EQUALS "C".

EXAMPLE OF PART NO. MS 3147 E 19-50 S Y

MS NUMBER — CLASS — SIZE — INSERT ARRANGEMENT — CONTACT STYLE — ALTERNATE INSERT POSITION

THIS STANDARD TAKES PRECEDENCE OVER DOCUMENTS REFERENCED HEREIN. REFERENCED DOCUMENTS SHALL BE OF THE ISSUE IN EFFECT ON DATE OF INVITATION FOR BID.

DIMENSIONS IN INCHES.
UNLESS OTHERWISE SPECIFIED TOLERANCE: DECIMALS: ± .016.
ANGULAR TOLERANCE: ± 1/2°.

FED. SUP. CLASS 5935

APPROVED 10 SEPT 62 REVISED (A) 1 NOV 1965 (B) 6 Mar 67 (C) 20 JAN 1969 (D) 21 JULY 1971

This military standard is approved by the Department of Defense and is mandatory for use by all Departments & Agencies of the Department of Defense. Selection for all new engineering and design applications and for repetitive use shall be made from this document.

DD FORM 10 APR 64 672

Procurement Specification MIL-C-81703

P.A. NAVY-AS

Other Cust ARMY-EL

International Interest

TITLE CONNECTOR, PLUG, ELECTRIC, CRIMP TYPE, PUSH-PULL COUPLING (CLASS E AND J) SERIES 2

SUPERSEDES:

MILITARY STANDARD

MS3147

SHEET 2

CLASS J

JACKETED CABLE GLAND SEAL

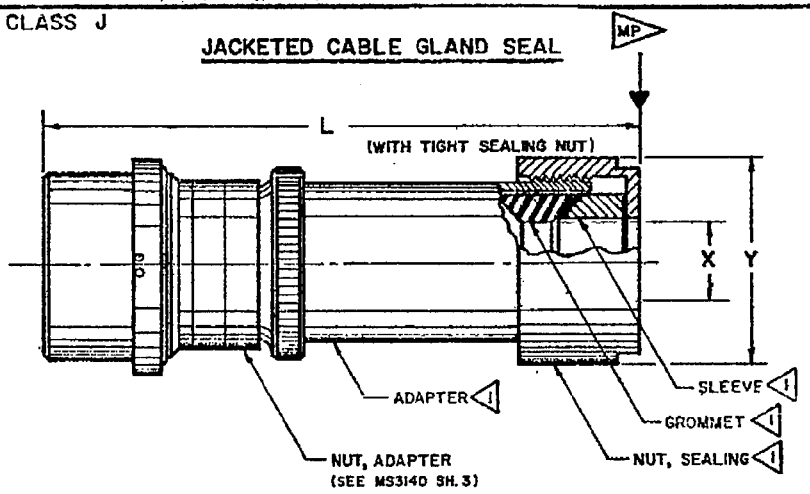

SHELL SIZE DASH NO.	L LENGTH MAX.	X INSIDE DIA. MIN.	X INSIDE DIA. MAX.	Y MAX.	MP MAX. CABLE WEIGHTS IN POUNDS. (ALLOWABLE FORCE IN DIRECTION INDICATED)
- 3	3.088	.178	.210	.645	2.0
- 7	4.072	.381	.413	.926	2.7
- 12	4.538	.412	.444	.988	4.0
- 19	4.572	.522	.554	1.113	5.5
-27	4.572	.600	.632	1.113	8.0
-37	4.603	.662	.694	1.176	12.0

DIMENSIONS IN INCHES UNLESS OTHERWISE SPECIFIED.
TOLERANCE: DECIMALS ±.016, ANGULAR TOLERANCE ±1/2°.
1 FOR ADAPTER, SEALING NUT, GROMMET & SLEEVE SEE MS3130 SH. 3.

CLASS J. JACKETED CABLE GLAND SEAL-WATERTIGHT TYPE-FOR USE WITH CLASS E CONNECTORS.

EXAMPLE OF PART NO.

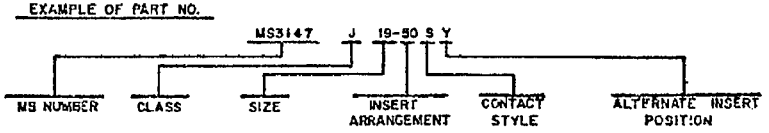

THIS STANDARD TAKES PRECEDENCE OVER DOCUMENTS REFERENCED HEREIN. REFERENCED DOCUMENTS SHALL BE OF THE ISSUE IN EFFECT ON DATE OF INVITATION FOR BID.

FED. SUP CLASS 5935

APPROVED 10 SEPT. '62 REVISED (D) FOR CHANGES SEE SHEETS 1 & 2.