This military standard is approved by the Department of Defense and is mandatory for use by all Departments & Agencies of the Department of Defense. Selection for all new engineering and design applications and for repetitive use shall be made from this document.

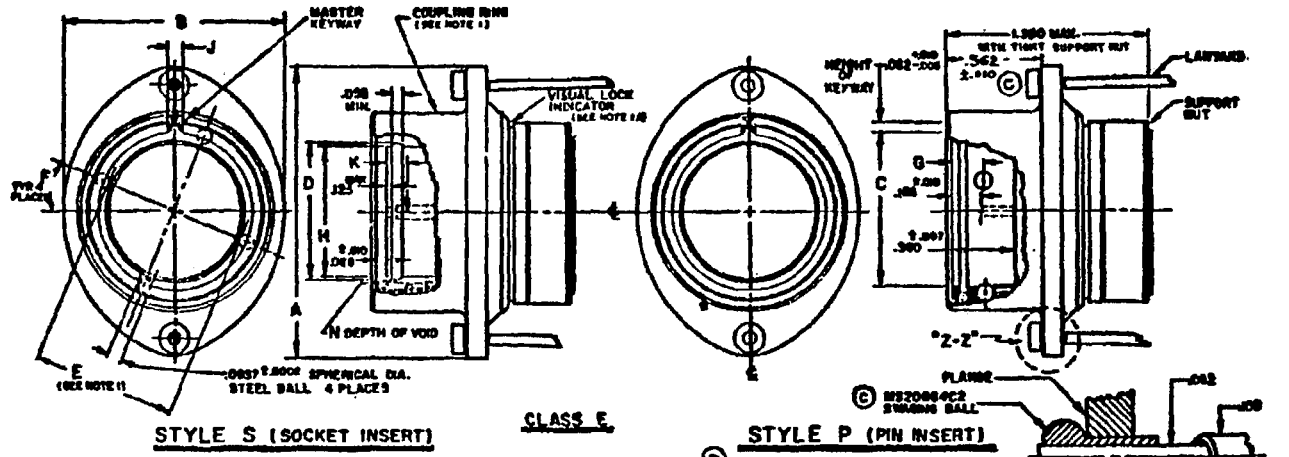

STYLE S (SOCKET INSERT)

CLASS E

STYLE P (PIN INSERT)

SHELL SIZE DASH NO.	A MAX. HEIGHT OF LANYARD FLANGE	B MAX. WIDTH OF LANYARD FLANGE	C MIN. I.D. SHELL	D ±.008 AVERAGE DIA INSERT SEAL	E MIN. DIA. BALL SPACING	F BALL LOCATION (ANGULAR)	G +.002 -.006 BALL LOCATION (DEPTH)	H ±.010 FRONT O.D. OF INSERT	J MAX WIDTH OF KEYWAY	N ±.031 DEPTH OF VOID	K POINT OF SPRING CONTACT	FOR INSERT ARRANGEMENT SEE DRAWING
-3	1.261	.925	.444	.374	.391	30°		.544				MS 33698
-7	1.411	1.062	.579	.490	.526			.460				MS 33699
-12	1.531	1.172	.713	.630	.661			.600				MS 33700
-19	1.681	1.328	.852	.770	.799			.740	.114	IN DISENGAGED POSITION .310	.138 MAX. MEASURE WITH SQUARE NOSE PIN HAVING BASIC DIAMETER OF MATING CONTACT	MS 33701
-27	1.828	1.473	1.007	.925	.954	22½°	.202	.895				MS 33702
-37	1.914	1.609	1.127	1.047	1.078			1.017				MS 33703

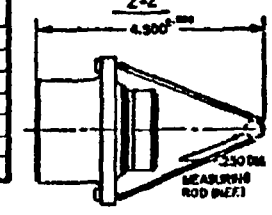

LANYARD DETAIL

DIMENSIONS IN INCHES
UNLESS OTHERWISE SPECIFIED, TOLERANCE: DECIMALS ± .01
ANGULAR TOLERANCE: ±1/2°

NOTE 1
COUPLING RING AND BALLS ARE SHOWN IN THE ENGAGED POSITION FOR CLARITY THIS POSITION SHALL ONLY BE POSSIBLE WHEN ENGAGED TO THE RECEPTACLE
IN THE NORMAL DISENGAGED POSITION THE FOLLOWING IS TRUE
A. THE VISUAL LOCK INDICATOR IS NOT IN VIEW
B. THE BALLS ARE RELEASED WHEN "E" MIN. EQUALS "C".

EXAMPLE OF PART NO. MS3148 E 19-20 S T

MS NUMBER | CLASS | SIZE | INSERT ARRANGEMENT | CONTACT STYLE | ALTERNATE INSERT POSITION

THIS STANDARD TAKES PRECEDENCE OVER DOCUMENTS REFERENCED HEREIN. REFERENCED DOCUMENTS SHALL BE OF THE ISSUE IN EFFECT ON DATE OF INVITATION FOR BID

P.A. NAVY-AS
Other Cust ARMY-EL
International Interest
Procurement Specification MIL-C-81703
TITLE CONNECTOR, PLUG, ELECTRIC, CRIMP TYPE LANYARD, PUSH-PULL COUPLING (CLASS E AND J)
SERIES 2
SUPERSEDES:
MILITARY STANDARD
MS3148
SHEET 1 OF 2
FED. SUP CLASS 5935

DD FORM 10 APR 64 672 (Coordinated) P.
5935-1761-10

APPROVED 10 SEPT. 63 REVISED (A) 1 NOV 1965 (B) 6 Mar 67 (C) 20 JAN 1969 (D) 21 JULY 1971

This military standard is approved by the Department of Defense and is mandatory for use by all Departments & Agencies of the Department of Defense. Selection for all new engineering and design applications and for repetitive use shall be made from this document.

DD FORM 10 APR 64 672 (Coordinated) PRL

P.A. NAVY-AS
Other Cust ARMY-EL
Procurement Specification MIL-C-81703
International Interest

TITLE
CONNECTOR, PLUG, ELECTRIC, CRIMP TYPE, LANYARD, PUSH-PULL COUPLING (CLASS E AND J)
SERIES 2
SUPERSEDES:

MILITARY STANDARD
MS 3148
SHEET 2

CLASS J

JACKETED CABLE GLAND SEAL

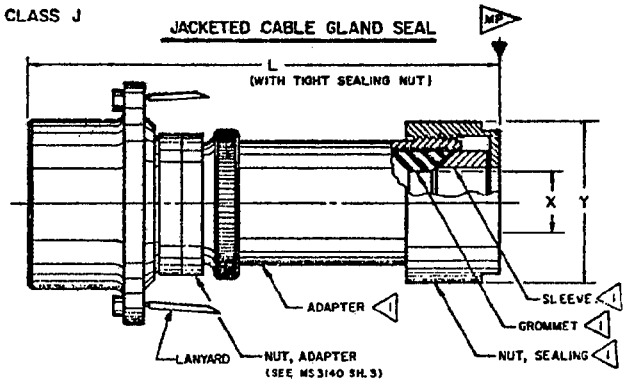

SHELL SIZE DASH NO.	L LENGTH MAX.	X INSIDE DIA. MIN.	X INSIDE DIA. MAX.	Y MAX.	MP MAX. CABLE WEIGHTS IN POUNDS (ALLOWABLE FORCE IN DIRECTION INDICATED)
-3	3.080	.178	.210	.645	2.0
-7	4.072	.381	.413	.926	2.7
-12	4.536	.412	.444	.988	4.0
-19	4.572	.522	.554	1.113	5.5
-27	4.572	.600	.632	1.113	8.0
-37	4.603	.662	.694	1.176	12.0

DIMENSIONS IN INCHES UNLESS OTHERWISE SPECIFIED.
TOLERANCE: DECIMALS ±.016, ANGULAR TOLERANCE ±1/2°.

1 FOR ADAPTER, SEALING NUT, GROMMET & SLEEVE SEE MS3130 SH. 3.

CLASS J. JACKETED CABLE GLAND SEAL—WATERTIGHT TYPE—FOR USE WITH CLASS E CONNECTORS.

EXAMPLE OF PART NO

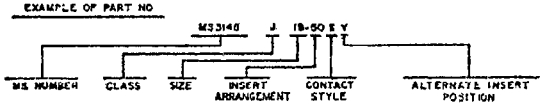

THIS STANDARD TAKES PRECEDENCE OVER DOCUMENTS REFERENCED HEREIN. REFERENCED DOCUMENTS SHALL BE OF THE ISSUE IN EFFECT ON DATE OF INVITATION FOR BID.

FED. SUP CLASS 5935

APPROVED 10 SEPT. '62 REVISED (D) FOR CHANGES SEE SHEETS 1 & 2.