FED SUP CLASS
5935

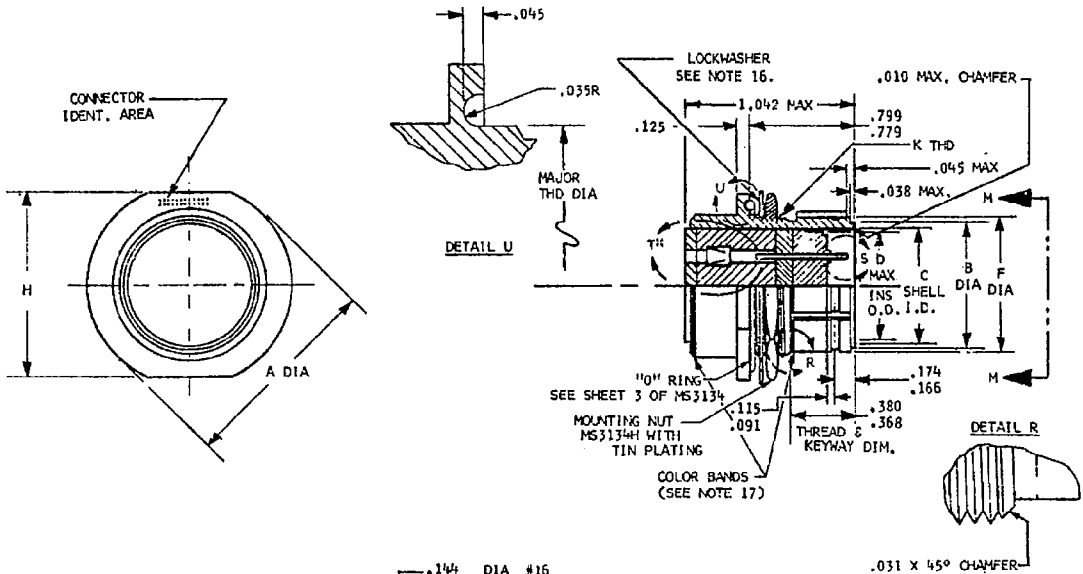

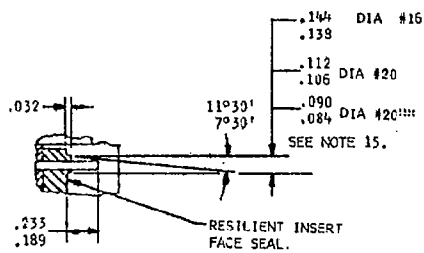

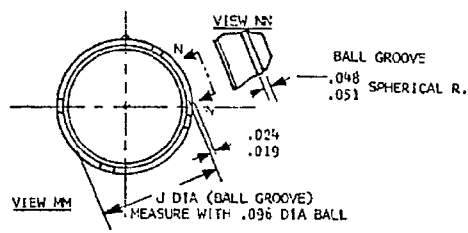

FIGURE I
CONNECTOR VIEW

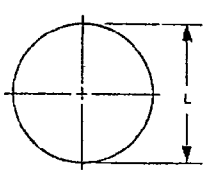

PANEL CUTOUT

* SEE SHEET 2 FOR DETAIL T

***ON OUTER ROW CONTACTS OF INSERT ARRANGEMENT INDICATED IN CHART.

PART NUMBER EXAMPLE

MS3149 N 3 - 50 P Y

- Y — ALTERNATE INSERT POSITION
- P — CONTACT STYLE (P-PIN)
- 50 — INSERT ARRANGEMENT
- 3 — SHELL SIZE
- N — CLASS
- MS3149 — MS NUMBER

INSERT ARRANGEMENTS REQUIRING REDUCED DIAMETERS FOR PIN CONTACT RAISED SEAL BARRIERS.		
SHELL SIZE	INSERT ARRANGE-MENTS	CONTACT CAVITIES
12	12-50	5,6,8,9,11,AND 12

P.A. Navy-AS Other Cust	TITLE CONNECTOR, RECEPTACLE, ELECTRIC, HERMETIC, CRIMP TYPE, SINGLE HOLE MOUNTING, PUSH-PULL COUPLING, SERIES 3 (CLASS N)	MILITARY STANDARD MS3149(NAVY)
PROCUREMENT SPECIFICATION MIL-C-81703	SUPERSEDES	SHEET 1 OF 3

APPROVED 4 Feb 1972 REVISED

Review activities:
Navy-EC

This standard has been approved by the Department of the Navy and is mandatory for use by that activity. All other military activities are required to evaluate this standard where suitable.

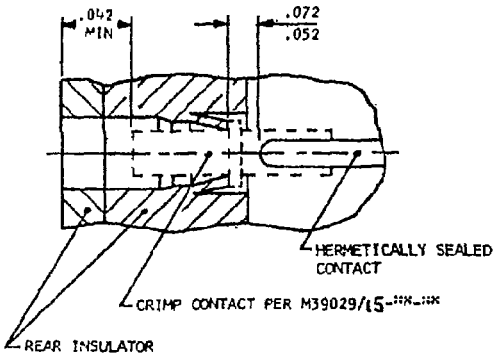

DETAIL T

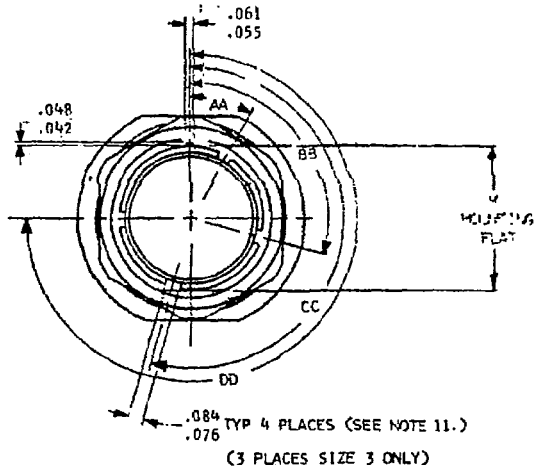

FIGURE 11
KEYWAY POSITIONS

ENGAGING ENDS OF CONTACTS

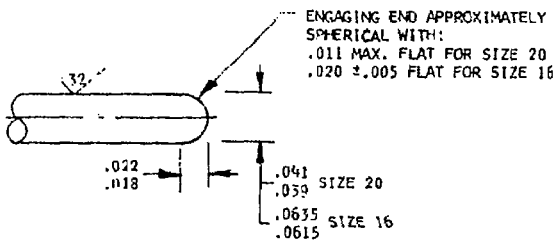

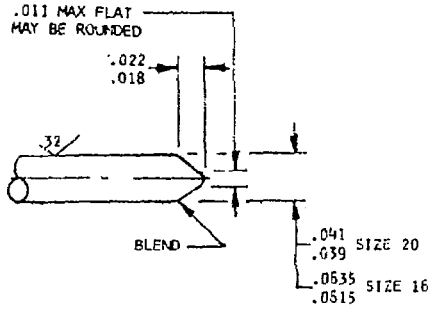

ENGAGING END
(OPTIONAL)

FIGURE III
CONTACT DETAILS

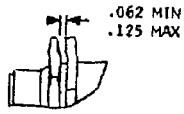

FIGURE IV
PANEL THICKNESS (TYP)

Review activities:
Navy-EC

APPROVED 4 Feb 1972 REVISED

This standard has been approved by the Department of the Navy and is mandatory for use by that activity. All other military activities are required to employ this standard where suitable.

P.A. Navy-AS Other Cust	TITLE CONNECTOR, RECEPTACLE, ELECTRIC, HERMETIC, CRIMP TYPE, SINGLE HOLE MOUNTING, PUSH-PULL COUPLING, SERIES 5 (CLASS N)	MILITARY STANDARD MS3149(NAVY)
PROCUREMENT SPECIFICATION MIL-C-81703	SUPERSEDES	SHEET 2

TABLE I
CONNECTOR DIMENSIONS AND WEIGHTS

SHELL SIZE	A	B	C	D	F	H	J	K THREAD	L
3	.785 .755	.392 .385	.367 .356	.330	.441 .431	.742 .712	.399 .391	9/16-24 UNEF-2A	.577
7	.905 .875	.527 .520	.483 .473	.451	.576 .566	.867 .837	.534 .526	11/16-24 UNEF-2A	.702
12	1.030 1.000	.661 .654	.624 .614	.553	.710 .700	.992 .962	.669 .661	13/16-20 UNEF-2A	.827
19	1.218 1.188	.800 .793	.763 .753	.738	.849 .839	1.180 1.150	.807 .799	1-20 UNEF-2A	1.015
27	1.343 1.313	.955 .948	.918 .908	.854	1.004 .994	1.305 1.275	.962 .954	1 1/8-18 UNEF-2A	1.140
37	1.467 1.437	1.077 1.070	1.040 1.030	.976	1.126 1.116	1.430 1.400	1.084 1.076	1 1/4-18 UNEF-2A	1.265

SHELL SIZE	M	WEIGHT (LBS) SEE NOTE 7 PIN INSERT
3	.523	(WEIGHT WILL BE SUPPLIED IN LATER REVISION)
7	.655	
12	.778	
19	.963	
27	1.089	
37	1.214	

TABLE II
KEYWAY POSITIONS

SHELL SIZE	AA	BB	CC	DD
3	23°	97°	187°	--
7	23°	97°	187°	277°
12	30°	105°	195°	270°
19	30°	105°	195°	270°
27	30°	105°	195°	270°
37	30°	105°	135°	270°

NOTES: (NOTES 1 THRU 6 APPLICABLE TO CONTACTS ONLY).

1. CONTACT FINISH: GOLD PLATE .000050 INCH MIN. IN ACCORDANCE WITH MIL-G-45204. A SUITABLE UNDERPLATING MAY BE USED. SILVER UNDERPLATING SHALL NOT BE USED. FINISH IS APPLICED AFTER SEALING.
2. DIMENSIONS IN INCHES, DIMENSIONS APPLY AFTER PLATING.
3. 63√ ALL OVER PER MIL-STD-10, UNLESS OTHERWISE SPECIFIED.
4. REMOVE ALL BURRS AND SHARP EDGES .003 TO .005 R.
5. DIAMETERS TO BE CONCENTRIC WITHIN .004 TIR.
6. DIAMETERS IN THE SAME CROSS-SECTIONAL PLANE TO BE CONCENTRIC WITH EACH OTHER WITHIN .003 TIR.
7. WEIGHT LISTED IS CONNECTOR MAXIMUM WEIGHT PER SHELL SIZE LESS CRIMP CONTACTS.
8. SHELL MATERIAL: COLD ROLLED STEEL, PER QQ-S-637.
9. SHELL FINISH: .0001 MIN. TIN PER MIL-T-10727, OVER NICKEL PER QQ-N-290.
10. EACH CONNECTOR SHALL BE PACKAGED WITH A PLASTIC DUST CAP OVER EACH END OF SHELL.
11. FOUR KEYWAYS (MMC) AND INSERT SHALL BE LOCATED WITHIN .004 EITHER SIDE OF (TP) RELATIVE TO MASTER KEYWAY (MMC) AND SHELL O.D. (MMC).
12. DIMENSIONS IN INCHES. UNLESS OTHERWISE SPECIFIED, TOLERANCE SHALL BE .XX ±.010 AND .XXX ± .005; ANGULAR TOLERANCE, X° ± 1°-0' AND X°X' ± 30'
13. INSERTION/REMOVAL TOOL, MS3160-### TO BE USED WITH THIS CONNECTOR.
14. CONTACT MIL-C-39029/15-### MUST BE USED FOR WIRE TERMINATIONS.
15. DIAMETERS SHOWN ARE AT BASE OF BARRIER.
16. LOCK WASHER OR OTHER SUITABLE MEANS SHALL BE USED TO ASSURE NUT ASSEMBLY.
17. COLOR BAND: (A) .070 ± .031 WIDE, COLOR BLUE.
    (B) BAND LOCATION MUST BE SUCH THAT IT IS VISIBLE WHEN MOUNTED.
18. MAXIMUM WIRE DIAMETER PERMISSIBLE; .074 FOR SIZE 20 CONTACTS, .103 FOR SIZE 16 CONTACT.

Review activities:
Navy-EC

This standard has been approved by the Department of the Navy and is mandatory for use by that activity. All other military activities are required to employ this standard where suitable.

APPROVED 4 Feb 1972 REVISED

P.A. Navy-AS Other Cust	TITLE CONNECTOR, RECEPTACLE, ELECTRIC, HERMETIC, CRIMP TYPE, SINGLE HOLE MOUNTING, PUSH-PULL COUPLING, SERIES 3 (CLASS N)	MILITARY STANDARD MS3149(NAVY)
PROCUREMENT SPECIFICATION MIL-C-81703	SUPERSEDES	SHEET 3

LIMITED COORDINATION