FED. SUP CLASS
5935

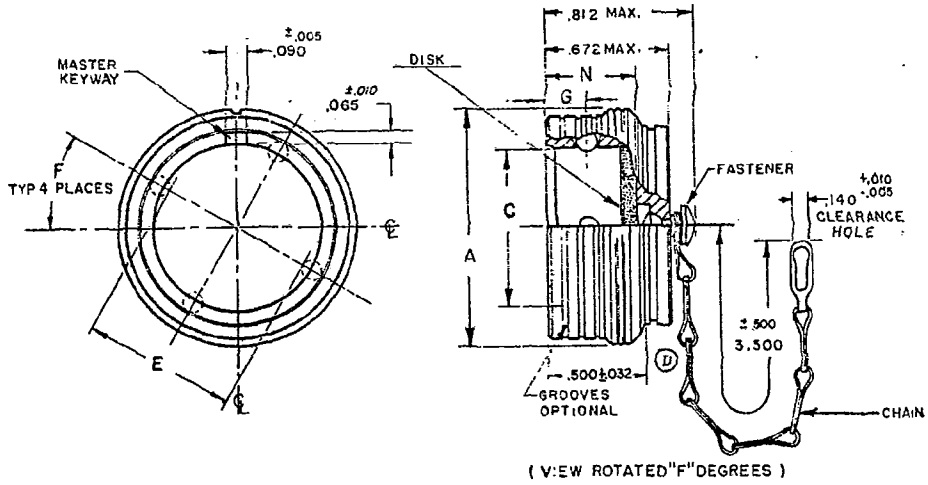

COVER WITH CHAIN
FOR USE WITH PIN OR SOCKET CONTACT RECEPTACLES

SHELL SIZE	A MAX. DIA. COUPLING RING	C MIN I.D. SHELL	E MIN. DIA BALL SPACING	F BALL LOCATION (ANGULAR)	G +.002 -.005 BALL LOCATION DEPTH	N ±.010 DEPTH OF VOID
-3	.796	.438	.391	30°	.202	.500
-7	.933	.577	.526		.124	.422
-12	1.140	.713	.681		.202	.500
-19	1.228	.852	.799	22 1/2°	.124	.422
-27	1.383	1.007	.954		.202	.500
-37	1.513	1.127	1.076		.124	.422

MATERIAL: COVER - ALUMINUM ALLOY CONFORMING TO MIL-C-26482.
(D) CHAIN - STAINLESS STEEL SASH CHAIN, RR-C-271, TYPE II, CLASS 3, GRADE NO. 8, PASSIVATED.
DISK - CLOSED CELL NEOPRENE SPONGE - MIL-G-3133 CLASS S.B. OR S.C.

EXAMPLE OF PART NO. MS3183 E 19
MS NUMBER — CLASS — SIZE

DIMENSIONS IN INCHES. UNLESS OTHERWISE SPECIFIED, TOLERANCE: DECIMALS ±.016, ANGLES ±1/2°.

THIS STANDARD TAKES PRECEDENCE OVER DOCUMENTS REFERENCED HEREIN.
REFERENCED DOCUMENTS SHALL BE OF THE ISSUE IN EFFECT ON DATE OF INVITATION FOR BIDS.

APPROVED 25 Apr 61 REVISED (A) 10 Sep 62 (B) 25 Jan 66 (C) 24 May 1967 (D) 20 JAN 1969 (E) 21 JULY 1971

P.A. NAVY-AS Other Cust ARMY-EL	International interest	TITLE COVER, PROTECTIVE, ELECTRIC CONNECTOR, RECEPTACLE, PUSH-PULL COUPLING	MILITARY STANDARD MS 3183
Procurement Specification MIL-C-81703		SUPERSEDES:	SHEET 1 OF 1

DD FORM 10 APR 64 672 (Coordinated) OBSOLETE 5935-1761-12

This military standard is approved by the Department of Defense and is mandatory for use by all Departments & Agencies of the Department of Defense. Selection for all new engineering and design applications and for repetitive use shall be made from this document.